2023

Price List
Nº2161-EN

Valid from 1. May 2023

Baths
Showers
Washbasins

BETTE

Colour Variety

Legend product categories for colour selection*

| 1 | Showers
Shower areas
Shower traysa

| 2 | Baths
Fitted

| 3 | Washbasins
Built- in
Undermounted
Wall mounted
Counter top

| 4 | Free-standing
Baths
Washbasins

| 5 | Apron-Baths
Wall installation
Corner installation
Highline

| 6 | Shower tiles

* When combined with extras such as Upstand, Anti-Slip Pro or Anti-Slip Sense, some colours may be excluded.
Please use our product configurator at www.my-bette.com for this purpose.
You can find the price list at www.my-bette.com/service/downloads.

Glossy colours

White 000
| 1 | 2 | 3 | 4 | 5 | 6 |

Ägäis 009
| 1 | 2 | 3 |

Caramel 046
| 1 | 2 | 3 |

Key West 031
| 1 | 2 | 3 |

Misty Pink 010
| 1 | 2 | 3 |

Black 056
| 1 | 2 | 3 | 4 |

Blue Pastel 116
| 1 | 2 |

Carneol 096
| 1 | 2 | 6 |

Ivory 014
| 1 | 2 | 3 |

Sorento Blue 067
| 1 | 2 | 3 |

Moss Green 016
| 1 | 2 | 3 |

Caspian Green 112
| 1 | 2 |

Bermuda Blue 023
| 1 | 2 | 3 |

Calypso 011
| 1 | 2 | 3 |

Evergreen 115
| 1 | 2 | 3 |

Alazee 130
| 1 | 2 |

Natura 038
| 1 | 2 | 3 | 4 | 5 |

Green 198
| 1 | 2 |

Camel 098
| 1 | 2 |

Rubin Red 057
| 1 | 2 |

Flamingo21 060
| 1 | 2 |

Misty Blue 049
| 1 | 2 |

Pearl 053
| 1 | 2 |

Sunset 013
| 1 | 2 | 3 |

Capri 015
| 1 | 2 | 3 |

Curry 040
| 1 | 2 | 3 |

Violet 124
| 1 | 2 | 3 |

Reflet Grey 044
| 1 | 2 |

Cashmere 090
| 1 | 2 |

Pergamon 001
| 1 | 2 | 3 | 4 | 5 | 6 |

Manhattan 002
| 1 | 2 | 3 | 4 | 5 | 6 |

Bahama beige 003
| 1 | 2 | 3 | 4 | 5 | 6 |

Starwhite 287
| 1 | 2 | 3 | 4 | 5 | 6 |

Midnight 790
| 1 | 2 | 3 | 4 | 5 | 6 |

Daylight 788
| 3 |

Forest 791
| 3 |

Torre 148
| 1 | 2 |

Colour deviations due to printing are possible.

Colour Variety

Legend product categories for colour selection*

| 1 | Showers
Shower areas
Shower trays

| 2 | Baths
Fitted

| 3 | Washbasins
Built- in
Undermounted
Wall mounted
Counter top

| 4 | Free-standing
Baths
Washbasins

| 5 | Apron-Baths
Wall installation
Corner installation
Highline

| 6 | Shower tiles

* When combined with extras such as Upstand, Anti-Slip Pro or Anti-Slip Sense, some colours may be excluded.
Please use our product configurator at www.my-bette.com for this purpose.
You can find the price list at www.my-bette.com/service/downloads.

Matt colours

Cream 441
| 1 | 3 | 6 |

Silver 410
| 1 | 3 | 6 |

Hazel 417
| 1 | 3 | 6 |

Cacao 439
| 1 | 6 |

Slate 402
| 1 | 3 | 6 |

Snow 440
| 1 | 2 | 3 | 4 | 5 | 6 |

Flax 423
| 1 | 3 | 6 |

Dust 413
| 1 | 3 | 6 |

Flint 414
| 1 | 3 | 6 |

Graphite 404
| 1 | 3 | 6 |

Anthracite 401
| 1 | 3 | 6 |

Raven 400
| 1 | 3 | 6 |

Beige 422
| 1 | 3 | 6 |

Quartz 412
| 1 | 3 | 6 |

Stone 416
| 1 | 3 | 6 |

Taupe 438
| 1 | 6 |

Ebano 434
| 1 | 3 | 6 |

Blue Satin 418
| 1 | 2 | 3 | 4 | 5 | 6 |

Sand 424
| 1 | 3 | 6 |

Greige 425
| 1 | 3 | 6 |

Cashmere 415
| 1 | 3 | 6 |

Smoke 403
| 1 | 3 | 6 |

Coffee 430
| 1 | 3 | 6 |

Ebony 035
| 1 | 2 | 3 | 4 | 5 | 6 |

Edelweiss 004
| 1 | 2 | 3 | 4 | 5 | 6 |

Crocus 043
| 1 | 2 |

Flanell 008
| 1 | 2 | 3 | 4 | 5 |

Jasmin 006
| 1 | 2 | 3 | 4 | 5 | 6 |

Stella 021
| 1 | 2 | 3 |

Magnolia 077
| 1 | 2 |

Chinchilla 029
| 1 | 2 |

Chantoung 646
| 1 | 2 |

Gris Satin 225
| 1 | 2 |

Montblanc 140
| 1 | 2 |

Vanille 144
| 1 | 2 |

Colour deviations due to printing are possible.

Colour Variety

BetteBicolour

Selected bath models can be finished with a coloured apron.

Glossy Black 350
| 4 * |

Matt Black 351
| 4 * |

Violet 352
| 4 * |

BetteLux Shape

Frame colours & Real wood veneer

Black Matt 815

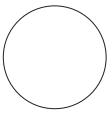

White Matt 807

Natural Oak 814

Real wood veneer is a natural material.
Differing grain underlines the natural character of the surface.
UV radiation changes colouring.

BetteLux Oval Couture

Function fabric for outdoor furniture by JAB Anstoetz, haptic as a typical sofa fabric, water-, mould- and climate resistant.

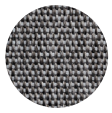

Elephant 852

Carbon 853

Ivory 850

Colour deviations due to printing are possible.

High gloss

Price List
№2161-EN

Legend Price group

BA	BASIC	☗	stock item
CO	COLLECTION		
CP	COMPONENTS		
IN	INSTALLATION		
EX	EXTRAS (Price calculation as per enamelled product.)		

Ordering aid

1. Specification of the order number
2. The article number and 3 digit colour number are separated by a hyphen, not by a space.
3. Colour number must always be given in 3 digits
4. The 1st possible code comes after the colour number without spaces. Subsequent extras should be separated by a comma, not by a space.
5. Please note the order of specifiying the extras.

   The last item should not be followed by a space or comma.

Info:
The ordering of bespoke items is not possible via EDI.

List of codes for extras:

Priority	Extra	Code
1	Special production as per drawing no.	ZN:
2	BetteUpstand, indication of tiling upstand no.	Z
3	BetteSpecial size, indication of length x width in mm	M:
3	shortened BetteUpstand, right	Y1
3	shortened BetteUpstand, left	Y2
3	shortened BetteUpstand, both sides	Y3
4	Profi Corner, indication of profi corner no.	E
5	Drilling for 3-hole-tap for washbasins	HLW3
5	Tapholes and drilling as per special drawing	HLZ
6	Grips	1GR/2GR
7	BetteJet Whirlsystem	JET
9	BetteSpa Whirlsystem	SPA
11	BetteAirjet Plus Whirlsystem	AJETP
13	Bath without overflow for BetteSensory	oUeL
13	Washbasin with overflow	mUeL
14	Special depth, indication in mm	ST:
16	BetteAnti-Slip Pro	AE
16	BetteAnti-Slip Sense	AS
16	BetteAnti-Slip Pro for glazed waste cover	AY
16	BetteAnti-Slip Sense for glazed waste cover	AX
17	BetteAntinoise for bath	AD
17	BetteAntinoise for shower tray	ADD
18	BetteDisinfection for Whirlpool	DES
20	Rotaplex Trio for Whirlpool	RT
23	BetteGlaze® Plus	PLUS
23	BetteGlaze® Plus for washbasins	PW
24	Polystyrene support	T
24	Minimum-support	T1
24	Minimum-support for BetteAir	T2
25	Individual laser logo	Lo:

Order examples:

Shower tray BetteUltra 900 × 900 mm (5930)
Colour: Pergamon (001)
Extras: BetteUpstand (ZXX), BetteGlaze® Plus (PLUS)

2 4
5930 - 001 Z71 , PLUS

1 Order number of the product for the dimension
3 Colour
5 Extras

Shower area BetteFloor 900 × 900 mm (5931)
Colour: White (000)
Extras: Anti-Slip Pro (AE), Minimum-support (T1)

2 4
5931 - 000 AE , T1

1 Order number of product for dimension
3 Colour
5 Extras

BetteStarlet Oval Silhouette 1750 × 800 mm (2680 CFXXK)
Colour: White (000)
Extra: BetteAnti-Slip Sense (AS)

2 4
2680 - 000 CFXXK , AS

1 Order number of product for dimension
3 Colour
1 Product variation code follows after the colour and before extra.
5 Extras

BetteLux Shape Standing mirror with rear panel oak natural 814 (Q050 FH814)
Colour frame: White matt (807)

2
Q050 - 807 FH814

1 Order number of product for dimension
3 Colour
1 Product variation code follows after the colour and before extra.

BetteStarlet Oval 1750 × 800 mm (2680)
Colour: White (000)
Whirlsystem: Airjet Plus (AJETP) in White finish (B350-000)
Extras and Accessories: Disinfection (DES) in White finish (B480-000)

2 4
2680-000 AJETP , DES

1 Order number of product for dimension
3 Colour
1 Product variation code follows after the colour and before extra.
5 Extras

2
B350-000

1 3

2
B480-000

1 3

Accessories are listed on separate lines in the same order.

Baths

BetteArco

→ p. 28

L × W × D; lying dimension	article no.
1400 × 1400 × 450; 1426	6035

BetteArt

→ p. 30

L × W × D; lying dimension	article no.
1805 × 755 × 420; 1564	3480 CFXXK

BetteArt I

→ p. 32

L × W × D; lying dimension	article no.
1805 × 800 × 420; 1564	3480 CWVHK

BetteArt IV

→ p. 34

L × W × D; lying dimension	article no.
1850 × 800 × 420; 1564	3480 CERHK

BetteArt V

→ p. 36

L × W × D; lying dimension	article no.
1850 × 800 × 420; 1564	3480 CELHK

BetteBambino

→ p. 38

L × W × D; lying dimension	article no.
1570 × 650 × 420; 1280	2770
1570 × 650 × 420; 1280	2780
1570 × 700 × 420; 1280	2570
1570 × 700 × 420; 1280	2580

BetteClassic

→ p. 40

L × W × D; lying dimension	article no.
1400 × 700 × 450; 965	1266
1500 × 700 × 450; 1070	1268
1600 × 700 × 450; 1155	1267
1600 × 750 × 450; 1170	1269
1650 × 750 × 450; 1165	1265
1700 × 700 × 450; 1265	3108
1700 × 730 × 450; 1265	3109
1700 × 750 × 450; 1265	3110
1700 × 800 × 450; 1265	3111
1750 × 750 × 450; 1265	3112
1800 × 700 × 450; 1360	1271
1800 × 750 × 450; 1360	1272
1800 × 800 × 450; 1360	1270
1900 × 800 × 450; 1460	1273

BetteComodo

→ p. 42

L × W × D; lying dimension	article no.
1700 × 750 × 450; 1250	1250
1700 × 800 × 450; 1250	1253
1800 × 800 × 450; 1310	1251
1900 × 900 × 450; 1380	1252

BetteComodo with side overflow

→ p. 44

L × W × D; lying dimension	article no.
1700 × 750 × 450; 1250	1620
1700 × 750 × 450; 1250	1640
1700 × 800 × 450; 1250	1623
1700 × 800 × 450; 1250	1643
1800 × 800 × 450; 1310	1621
1800 × 800 × 450; 1310	1641
1900 × 900 × 450; 1380	1622
1900 × 900 × 450; 1380	1642

BetteDuett

→ p. 46

L × W × D; lying dimension	article no.
1700 × 750 × 420; 1210	3020
1700 × 800 × 420; 1210	3100

BetteDuo

→ p. 48

L × W × D; lying dimension	article no.
1800 × 800 × 420; 1280	3820

BetteEve

→ p. 50

L × W × D; lying dimension	article no.
1800 × 1000 × 450; 1270	6042

BetteEve Oval

→ p. 52

L × W × D; lying dimension	article no.
1800 × 1000 × 450; 1270	6043

BetteEve Oval Silhouette

→ p. 54

L × W × D; lying dimension	article no.
1800 × 1000 × 450; 1270	6043 CFXXS

BetteForm

→ p. 56

L × W × D; lying dimension	article no.
1400 × 700 × 420; 965	2940
1500 × 700 × 420; 1070	2941
1600 × 700 × 420; 1155	2942
1600 × 750 × 420; 1170	2943
1650 × 750 × 420; 1170	2944
1700 × 700 × 420; 1265	2945
1700 × 730 × 420; 1265	2946
1700 × 750 × 420; 1275	2947
1700 × 800 × 420; 1275	2948
1750 × 750 × 420; 1275	2949
1800 × 800 × 420; 1360	2950
1900 × 800 × 420; 1460	2951

BetteFree

→ p. 58

L × W × D; lying dimension	article no.
1700 × 750 × 450; 1160	6829
1800 × 800 × 450; 1260	6830
1900 × 900 × 450; 1360	6831
2000 × 1000 × 450; 1460	6832

BetteLoft

→ p. 60

L × W × D; lying dimension	article no.
1700 × 800 × 420; 1223	3171
1800 × 800 × 420; 1327	3172
1900 × 900 × 420; 1426	3173

Baths

BetteLoft Ornament

→ p. 62

L × W × D; lying dimension	article no.
1810 × 810 × 420; 1327	3172 CFXX6A

BetteLuna

→ p. 64

L × W × D; lying dimension	article no.
1700 × 750 × 450; 1365	2750
1700 × 750 × 450; 1365	2760

BetteLux

→ p. 66

L × W × D; lying dimension	article no.
1700 × 750 × 450; 1270	3440
1800 × 800 × 450; 1345	3441
1900 × 900 × 450; 1420	3442

BetteLux Silhouette

→ p. 68

L × W × D; lying dimension	article no.
1700 × 750 × 450; 1270	3440 CFXXS
1800 × 800 × 450; 1345	3441 CFXXS

BetteLux Silhouette Side

→ p. 70

L × W × D; lying dimension	article no.
1700 × 850 × 450; 1270	3460 CFXVS
1800 × 900 × 450; 1345	3461 CFXVS

BetteLux I Silhouette Side

→ p. 72

L × W × D; lying dimension	article no.
1700 × 850 × 450; 1270	3460 CWVVS
1800 × 900 × 450; 1345	3461 CWVVS

BetteLux IV Silhouette Side

→ p. 74

L × W × D; lying dimension	article no.
1700 × 850 × 450; 1270	3460 CERVS
1800 × 900 × 450; 1345	3461 CERVS

BetteLux V Silhouette Side

→ p. 76

L × W × D; lying dimension	article no.
1700 × 850 × 450; 1270	3460 CELVS
1800 × 900 × 450; 1345	3461 CELVS

BetteLux Shape

→ p. 78

L × W × D; lying dimension	article no.
1700 × 750 × 450; 1270	3451
1800 × 800 × 450; 1345	3452
1900 × 900 × 450; 1420	3453

BetteLux Oval

→ p. 80

L × W × D; lying dimension	article no.
1700 × 750 × 450; 1270	3465
1800 × 800 × 450; 1340	3466
1900 × 900 × 450; 1420	3467

BetteLux Oval Couture

→ p. 82

L × W × D; lying dimension	article no.
1800 × 800 × 450; 1340	3466 TX

BetteLux Oval Highline

→ p. 84

L × W × D; lying dimension	article no.
1800 × 800 × 450; 1340	3466 CFXXH
1900 × 900 × 450; 1420	3467 CFXXH

BetteLux Oval Silhouette

→ p. 86

L × W × D; lying dimension	article no.
1700 × 750 × 450; 1270	3465 CFXXS
1800 × 800 × 450; 1340	3466 CFXXS
1900 × 900 × 450; 1420	3467 CFXXS

BetteLux Oval I Silhouette

→ p. 88

L × W × D; lying dimension	article no.
1700 × 800 × 450; 1270	3415 CWVVS
1800 × 850 × 450; 1340	3416 CWVVS
1900 × 950 × 450; 1420	3417 CWVVS

BetteLux Oval IV Silhouette

→ p. 90

L × W × D; lying dimension	article no.
1750 × 800 × 450; 1270	3425 CERVS
1850 × 850 × 450; 1340	3426 CERVS
1950 × 950 × 450; 1420	3427 CERVS

BetteLux Oval V Silhouette

→ p. 92

L × W × D; lying dimension	article no.
1750 × 800 × 450; 1270	3435 CELVS
1850 × 850 × 450; 1340	3436 CELVS
1950 × 950 × 450; 1420	3437 CELVS

BetteMetric

→ p. 94

L × W × D; lying dimension	article no.
2060 × 900 × 450; 1470	6840
2060 × 900 × 450; 1470	6841

BetteOcean

→ p. 96

L × W × D; lying dimension	article no.
1500 × 700 × 450; 1235	8858
1500 × 700 × 450; 1235	8859
1600 × 700 × 450; 1335	8850
1600 × 700 × 450; 1335	8851
1700 × 700 × 450; 1335	8852
1700 × 700 × 450; 1335	8853
1700 × 750 × 450; 1435	8854
1700 × 750 × 450; 1435	8855
1700 × 800 × 450; 1435	8765
1700 × 800 × 450; 1435	8865
1800 × 800 × 450; 1535	8856
1800 × 800 × 450; 1535	8857

BetteOcean Low-Line

→ p. 98

L × W × D; lying dimension	article no.
1500 × 700 × 380; 1235	8841
1500 × 700 × 380; 1235	8842
1600 × 700 × 380; 1335	8830
1600 × 700 × 380; 1335	8831
1700 × 700 × 380; 1335	8832
1700 × 700 × 380; 1335	8833
1700 × 750 × 380; 1435	8834
1700 × 750 × 380; 1435	8835
1700 × 800 × 380; 1435	8836
1700 × 800 × 380; 1435	8837
1800 × 800 × 380; 1535	8838
1800 × 800 × 380; 1535	8839

Baths

BetteOne

→ p. 100

L × W × D; lying dimension	article no.
1600 × 700 × 420; 1250	3310
1700 × 700 × 420; 1340	3311
1700 × 750 × 420; 1340	3312
1800 × 800 × 420; 1420	3313
1900 × 900 × 420; 1515	3314

BetteOne Relax

→ p. 102

1800 × 800 × 450; 1080	3323
1900 × 900 × 450; 1165	3324
2000 × 900 × 450; 1285	3325

BettePond

→ p. 104

1500 × 1500 × 450; 1235	6045

BettePond Silhouette

→ p. 106

1500 × 1500 × 450; 1235	6045 CFXXS

BettePool Oval

→ p. 108

1641 × 960 × 450; 1215	6050

BettePool I

→ p. 110

1605 × 1022 × 450; 1215	6052
1605 × 1022 × 450; 1215	6053

BettePool I Panel

→ p. 112

1605 × 1022 × 450; 1215	6052 CERV
1605 × 1022 × 450; 1215	6053 CELV

BettePool III

→ p. 114

1598 × 1130 × 450; 1215	6056
1598 × 1130 × 450; 1215	6057

BettePool III Panel Corner Installation

→ p. 116

1598 × 1130 × 450; 1215	6056 CCVV
1598 × 1130 × 450; 1215	6057 CCVV

BetteSelect

→ p. 118

1600 × 700 × 420; 1200	3410
1700 × 700 × 420; 1300	3411
1700 × 750 × 420; 1300	3412
1800 × 800 × 420; 1400	3413

BetteSelect with side overflow

→ p. 120

1600 × 700 × 420; 1200	3420
1600 × 700 × 420; 1200	3430
1700 × 700 × 420; 1300	3421
1700 × 700 × 420; 1300	3431
1700 × 750 × 420; 1300	3422
1700 × 750 × 420; 1300	3432
1800 × 800 × 420; 1400	3423
1800 × 800 × 420; 1400	3433

BetteSelect Duo

→ p. 122

1700 × 750 × 420; 1185	3472
1800 × 800 × 420; 1285	3473

BetteSet

→ p. 124

1500 × 750 × 380; 1195	2560
1600 × 700 × 380; 1235	3650
1600 × 750 × 380; 1250	3660
1650 × 750 × 380; 1250	3560
1700 × 750 × 380; 1350	3060
1700 × 800 × 380; 1350	3760
1800 × 800 × 380; 1435	3860

BetteSpace S

→ p. 126

1700 × 750 × 420; 1340	1130
1700 × 750 × 420; 1340	1140

BetteSpace M

→ p. 128

1700 × 900 × 420; 1346	1131
1700 × 900 × 420; 1346	1141

BetteSpace L

→ p. 130

1700 × 1300 × 420; 1341	1132
1700 × 1300 × 420; 1341	1142

BetteStarlet

→ p. 132

1500 × 800 × 420; 1070	1210
1570 × 700 × 420; 1170	2590
1600 × 650 × 420; 1170	2540
1600 × 700 × 420; 1170	1220
1650 × 700 × 420; 1170	1230
1700 × 700 × 420; 1270	1730
1700 × 750 × 420; 1270	1380
1750 × 800 × 420; 1270	1450
1800 × 750 × 420; 1370	1430
1800 × 800 × 420; 1370	1630
1850 × 850 × 420; 1370	1631
1900 × 900 × 420; 1465	1830

BetteStarlet Spirit

→ p. 134

1700 × 750 × 420; 1270	1384
1800 × 800 × 420; 1370	1634

BetteStarlet I

→ p. 136

1650 × 750 × 420; 1170	8300
1750 × 800 × 420; 1270	8310
1850 × 850 × 420; 1370	8320

BetteStarlet I Silhouette

→ p. 138

L × W × D; lying dimension	article no.
1650 × 750 × 420; 1170	8300 CWVVK
1750 × 800 × 420; 1270	8310 CWVVK
1850 × 850 × 420; 1370	8320 CWVVK
1950 × 950 × 420; 1470	8325 CWVVK

BetteStarlet II

→ p. 140

L × W × D; lying dimension	article no.
1650 × 750 × 420; 1170	8330
1750 × 800 × 420; 1270	8340
1850 × 850 × 420; 1370	8350

BetteStarlet IV

→ p. 142

L × W × D; lying dimension	article no.
1650 × 750 × 420; 1170	6650
1750 × 800 × 420; 1270	6660
1850 × 850 × 420; 1370	6670

BetteStarlet IV Silhouette

→ p. 144

L × W × D; lying dimension	article no.
1650 × 750 × 420; 1170	6650 CERVK
1750 × 800 × 420; 1270	6660 CERVK
1850 × 850 × 420; 1370	6670 CERVK
1950 × 950 × 420; 1470	6677 CERVK

BetteStarlet V

→ p. 146

L × W × D; lying dimension	article no.
1650 × 750 × 420; 1170	6680
1750 × 800 × 420; 1270	6690
1850 × 850 × 420; 1370	6700

BetteStarlet V Silhouette

→ p. 148

L × W × D; lying dimension	article no.
1650 × 750 × 420; 1170	6680 CELVK
1750 × 800 × 420; 1270	6690 CELVK
1850 × 850 × 420; 1370	6700 CELVK
1950 × 950 × 420; 1470	6720 CELVK

BetteStarlet Flair Oval

→ p. 150

L × W × D; lying dimension	article no.
1580 × 680 × 420; 1170	8772
1680 × 730 × 420; 1270	8773
1780 × 780 × 420; 1370	8774
1880 × 880 × 420; 1465	8775

BetteStarlet Hexa

→ p. 152

L × W × D; lying dimension	article no.
1880 × 700 × 420; 1170	2040
2000 × 750 × 420; 1270	2060
2100 × 800 × 420; 1370	2080

BetteStarlet Oval

→ p. 154

L × W × D; lying dimension	article no.
1500 × 800 × 420; 1070	2700
1650 × 750 × 420; 1170	2720
1750 × 800 × 420; 1270	2680
1850 × 850 × 420; 1370	2740
1950 × 950 × 420; 1465	2745

BetteStarlet Oval Silhouette

→ p. 156

L × W × D; lying dimension	article no.
1500 × 800 × 420; 1070	2700 CFXXK
1650 × 750 × 420; 1170	2720 CFXXK
1750 × 800 × 420; 1270	2680 CFXXK
1850 × 850 × 420; 1370	2740 CFXXK
1950 × 950 × 420; 1470	2745 CFXXK

BetteStep

→ p. 158

L × W × D; lying dimension	article no.
1050 × 650 × 420	1050
1180 × 730 × 420	1060

LaBette

→ p. 160

L × W × D; lying dimension	article no.
1080 × 730 × 380; 865	1080
1180 × 730 × 380; 945	1180
1200 × 700 × 390; 920	1200
1240 × 700 × 420; 925	1240
1300 × 700 × 390; 995	1300

BetteAir

→ p. 164

L × W × D; lying dimension	article no.
900 × 900	7350
1000 × 900	7351
1000 × 1000	7352
1100 × 900	7359
1100 × 1000	7360
1200 × 800	7353
1200 × 900	7354
1200 × 1000	7355
1200 × 1200	7361
1400 × 900	7356
1400 × 1000	7357
1500 × 900	7362
1500 × 1000	7363
1600 × 900	7364
1600 × 1000	7365

BetteFlat

→ p. 166

L × W × D; lying dimension	article no.
1200 × 1200	3372 AE

BetteFloor 800 mm - 1000 mm

→ p. 168

L × W × D; lying dimension	article no.
800 × 800	5831
900 × 700	5711
900 × 750	5841
900 × 800	8751
900 × 900	5931
1000 × 700	5881
1000 × 750	1651
1000 × 800	5491
1000 × 900	1661
1000 × 1000	5941

BetteFloor 1100 mm - 1200 mm

→ p. 170

L × W × D; lying dimension	article no.
1100 × 750	8732
1100 × 800	8731
1100 × 900	8631
1100 × 1000	8735
1200 × 700	1672
1200 × 750	1671
1200 × 800	1681
1200 × 900	1261
1200 × 1000	8661
1200 × 1200	8721

Showers

BetteFloor 1300 mm - 1500 mm

→ p. 172

L × W × (D)	article no.
1300 × 750	5797
1300 × 800	5793
1300 × 900	5791
1300 × 1000	5794
1400 × 700	5803
1400 × 750	5802
1400 × 800	5801
1400 × 900	5836
1400 × 1000	5851
1500 × 700	5938
1500 × 750	5939
1500 × 800	5937
1500 × 900	5936
1500 × 1000	5946

BetteFloor 1600 mm - 1800 mm

→ p. 174

L × W × (D)	article no.
1600 × 700	5948
1600 × 750	5949
1600 × 800	5957
1600 × 900	5966
1600 × 1000	5969
1700 × 750	5994
1700 × 800	5989
1700 × 900	5991
1700 × 1000	5817
1800 × 800	5981
1800 × 900	5988
1800 × 1000	5818

BetteFloor Caro

→ p. 176

L × W × (D)	article no.
900 × 900	7191
1000 × 1000	7211

BetteFloor Corner

→ p. 178

L × W × (D)	article no.
900 × 900	5421
1000 × 1000	5451

BetteFloor Side 900 mm - 1200 mm

→ p. 180

L × W × (D)	article no.
900 × 900	3381
1000 × 800	3388
1000 × 900	3385
1000 × 1000	3382
1100 × 800	3374
1100 × 900	3396
1200 × 800	3387
1200 × 900	3380
1200 × 1000	3383
1200 × 1200	3391

BetteFloor Side 1300 mm - 1500 mm

→ p. 182

L × W × (D)	article no.
1300 × 900	3398
1300 × 1000	3399
1400 × 800	3379
1400 × 900	3384
1400 × 1000	3386
1400 × 1200	3394
1500 × 900	3393
1500 × 1000	3389
1500 × 1200	3395

BetteFloor Side 1600 mm - 1800 mm

→ p. 184

L × W × (D)	article no.
1600 × 800	3375
1600 × 900	3390
1600 × 1000	3397
1600 × 1200	3392
1700 × 900	3376
1800 × 900	3377
1800 × 1000	3378

BetteCaro 35 mm, same shank length

→ p. 186

L × W × (D)	article no.
800 × 800 × 35	5319
900 × 900 × 35	7189
1000 × 1000 × 35	7219

BetteCorner 35 mm, same shank length

→ p. 188

L × W × (D)	article no.
800 × 800 × 35	5399
900 × 900 × 35	5429
1000 × 1000 × 35	5459

BetteCorner 35 mm, different shank length

→ p. 190

L × W × (D)	article no.
750 × 900 × 35	8119
800 × 900 × 35	5401
900 × 750 × 35	8159
900 × 800 × 35	5404
900 × 1000 × 35	5461
1000 × 900 × 35	5464

BetteDelta 800 mm - 900 mm

→ p. 192

L × W × (D)	article no.
800 × 750 × 280	5660
800 × 800 × 280	5810
900 × 700 × 280	5740
900 × 750 × 280	5760
900 × 800 × 280	5960
900 × 900 × 280	5910

BetteDelta 1000 mm - 1200 mm

→ p. 194

L × W × (D)	article no.
1000 × 800 × 280	5510
1000 × 1000 × 280	5610
1200 × 800 × 280	5860

BetteQuinta 700 mm - 900 mm

→ p. 196

L × W × (D)	article no.
700 × 700 × 150	5700
750 × 700 × 150	5370
750 × 750 × 150	5540
800 × 700 × 150	5690
800 × 750 × 150	5650
800 × 800 × 150	5800
850 × 700 × 150	5790
850 × 750 × 150	1910
850 × 850 × 150	1920
900 × 600 × 150	8620
900 × 700 × 150	5730
900 × 750 × 150	5750
900 × 800 × 150	5950
900 × 850 × 150	1900
900 × 900 × 150	5900

Showers

BetteQuinta 1000 mm - 1200 mm

→ p. 198

L × W × (D)	article no.
1000 × 700 × 150	5890
1000 × 750 × 150	5560
1000 × 800 × 150	5500
1000 × 900 × 150	5390
1000 × 1000 × 150	5600
1050 × 750 × 150	8700
1100 × 800 × 150	8740
1100 × 900 × 150	8650
1200 × 700 × 150	5990
1200 × 750 × 150	5580
1200 × 800 × 150	5850
1200 × 900 × 150	1290
1200 × 1000 × 150	8680
1200 × 1200 × 150	5640

BetteSupra 700 mm - 850 mm

→ p. 200

L × W × (D)	article no.
700 × 700 × 65	5720
750 × 700 × 65	5360
750 × 750 × 65	5530
800 × 700 × 65	5680
800 × 750 × 65	5670
800 × 800 × 65	5820
850 × 700 × 65	5780
850 × 750 × 65	1570
850 × 850 × 65	1590

BetteSupra = 900 mm

→ p. 202

L × W × (D)	article no.
900 × 600 × 65	8610
900 × 700 × 65	5710
900 × 750 × 65	5770
900 × 800 × 65	5970
900 × 850 × 65	1560
900 × 900 × 65	5920

BetteSupra 1000 mm - 1100 mm

→ p. 204

L × W × (D)	article no.
1000 × 700 × 65	5880
1000 × 750 × 65	5550
1000 × 800 × 65	5520
1000 × 900 × 65	5380
1000 × 1000 × 65	5620
1050 × 750 × 65	8690
1100 × 700 × 65	8726
1100 × 750 × 65	8728
1100 × 800 × 65	8730
1100 × 900 × 65	8640
1100 × 1000 × 65	8738
1100 × 1100 × 65	8744

BetteSupra 1200 mm - 1300 mm

→ p. 206

L × W × (D)	article no.
1200 × 700 × 65	5980
1200 × 750 × 65	5570
1200 × 800 × 65	5870
1200 × 900 × 65	1690
1200 × 1000 × 65	8670
1200 × 1100 × 65	8665
1200 × 1200 × 65	5630
1300 × 800 × 65	5787
1300 × 900 × 65	5796
1300 × 1000 × 65	5789
1300 × 1300 × 65	5827

BetteSupra 1400 mm - 1500 mm

→ p. 208

L × W × (D)	article no.
1400 × 700 × 65	5825
1400 × 750 × 65	5815
1400 × 800 × 65	5805
1400 × 900 × 65	5835
1400 × 1000 × 65	5839
1400 × 1400 × 65	5829
1500 × 700 × 65	5915
1500 × 750 × 65	5925
1500 × 800 × 65	5933
1500 × 900 × 65	5935
1500 × 1000 × 65	5945
1500 × 1500 × 65	5985

BetteSupra 1600 mm - 1800 mm

→ p. 210

L × W × (D)	article no.
1600 × 700 × 65	5952
1600 × 750 × 65	5954
1600 × 800 × 65	5956
1600 × 900 × 65	5962
1600 × 1000 × 65	5968
1700 × 700 × 65	5993
1700 × 750 × 65	5997
1700 × 800 × 65	5972
1700 × 900 × 65	5999
1700 × 1000 × 65	5807
1800 × 800 × 65	5987
1800 × 900 × 65	5983
1800 × 1000 × 65	5809

BetteSupra with polystyrene support

→ p. 212

L × W × (D)	article no.
800 × 800 × 65	5820 T
900 × 700 × 65	5710 T
900 × 750 × 65	5770 T
900 × 900 × 65	5920 T
1000 × 800 × 65	5520 T
1000 × 1000 × 65	5620 T

BetteUltra 700 mm - 850 mm

→ p. 214

L × W × (D)	article no.
700 × 700 × 25	5719
750 × 750 × 25	5529
800 × 700 × 25	5679
800 × 750 × 25	5669
800 × 800 × 25	5830
850 × 850 × 25	1589

BetteUltra = 900 mm

→ p. 216

L × W × (D)	article no.
900 × 600 × 25	8600
900 × 700 × 25	5709
900 × 750 × 25	5840
900 × 800 × 25	8750
900 × 850 × 25	1559
900 × 900 × 25	5930

BetteUltra = 1000 mm

→ p. 218

L × W × (D)	article no.
1000 × 700 × 25	5879
1000 × 750 × 25	1650
1000 × 800 × 25	5490
1000 × 900 × 25	1660
1000 × 1000 × 25	5940

BetteUltra 1050 mm - 1100 mm

→ p. 220

L × W × (D)	article no.
1050 × 750 × 35	8710
1100 × 700 × 35	8725
1100 × 750 × 35	8727
1100 × 800 × 35	8729
1100 × 900 × 35	8630
1100 × 1000 × 35	8737
1100 × 1100 × 35	8743

BetteUltra = 1200 mm

→ p. 222

L × W × (D)	article no.
1200 × 700 × 35	5979
1200 × 750 × 35	1670
1200 × 800 × 35	1680
1200 × 900 × 35	1260
1200 × 1000 × 35	8660
1200 × 1100 × 35	8664
1200 × 1200 × 35	8720

Showers | Washbasins

BetteUltra 1300 mm - 1400 mm

→ p. 224

1300 × 700 × 35	5784
1300 × 750 × 35	5785
1300 × 800 × 35	5786
1300 × 900 × 35	5795
1300 × 1000 × 35	5788
1300 × 1300 × 35	5826
1400 × 700 × 35	5824
1400 × 750 × 35	5814
1400 × 800 × 35	5804
1400 × 900 × 35	5834
1400 × 1000 × 35	5838
1400 × 1400 × 35	5828

BetteUltra = 1500 mm

→ p. 226

1500 × 700 × 35	5914
1500 × 750 × 35	5924
1500 × 800 × 35	5932
1500 × 900 × 35	5934
1500 × 1000 × 35	5944
1500 × 1500 × 35	5984

BetteUltra 1600 mm - 2000 mm

→ p. 228

1600 × 700 × 35	5951
1600 × 750 × 35	5953
1600 × 800 × 35	5955
1600 × 900 × 35	5961
1600 × 1000 × 35	5967
1700 × 700 × 35	5992
1700 × 750 × 35	5996
1700 × 800 × 35	5971
1700 × 900 × 35	5998
1700 × 1000 × 35	5806
1800 × 800 × 35	5986
1800 × 900 × 35	5982
1800 × 1000 × 35	5808
1900 × 900 × 35	5973
2000 × 900 × 35	5974

BetteUltra with polystyrene support

→ p. 230

800 × 800 × 25	5830 T
900 × 700 × 25	5709 T
900 × 750 × 25	5840 T
900 × 800 × 25	8750 T
900 × 900 × 25	5930 T
1000 × 700 × 25	5879 T
1000 × 750 × 25	1650 T
1000 × 800 × 25	5490 T
1000 × 1000 × 25	5940 T
1100 × 800 × 35	8729 T
1100 × 900 × 35	8630 T
1200 × 750 × 35	1670 T
1200 × 800 × 35	1680 T
1200 × 900 × 35	1260 T
1200 × 1000 × 35	8660 T
1400 × 800 × 35	5804 T
1400 × 900 × 35	5834 T
1500 × 900 × 35	5934 T

Washbasins

BetteAqua Built-In

→ p. 234

600 × 495 × 80	A070
600 × 495 × 80	A070 HLW1
800 × 495 × 80	A071
800 × 495 × 80	A071 HLW1
1400 × 495 × 80	A072
1400 × 495 × 80	A072 HLW1
1400 × 495 × 80	A072 HLW2

BetteArt Counter Top

→ p. 236

300 × 400 × 80	A180
600 × 400 × 100	A181
800 × 400 × 100	A182

BetteArt Monolith

→ p. 238

600 × 400 × 100	A183

BetteComodo Built-In

→ p. 240

600 × 495 × 120	A215
600 × 495 × 120	A215 HLW1
800 × 495 × 120	A216
800 × 495 × 120	A216 HLW1

L × W × (D)	article no.

BetteComodo Undermounted

→ p. 242

574 × 380 × 120	A217
774 × 380 × 120	A218

BetteComodo Undermounted with overflow

→ p. 244

574 × 380 × 120	A217 mUeL
774 × 380 × 120	A218 mUeL

BetteCraft Shell

→ p. 246

350 × 350 × 120	A240
450 × 450 × 120	A241

BetteLoft Built-In

→ p. 248

800 × 495 × 100	A230
800 × 495 × 100	A230 HLW1

BetteLoft Undermounted

→ p. 250

740 × 386 × 100	A231

BetteLoft Undermounted

→ p. 252

740 × 386 × 100	A231 mUeL

BetteLoft Ornament Wall Mounted, 1 row

→ p. 254

825 × 525 × 100	A230 SWV1A
825 × 525 × 100	A230 SWV1A,HLW1

Washbasins

BetteLoft Ornament Wall Mounted, 4 rows

→ p. 256

L × W × Internal depth	article no.
815 × 510 × 100	A230 SWV4A
815 × 510 × 100	A230 SWV4A,HLW1

BetteLux Built-In

→ p. 258

L × W × Internal depth	article no.
600 × 495 × 120	A160
600 × 495 × 120	A160 HLW1
800 × 495 × 120	A161
800 × 495 × 120	A161 HLW1

BetteLux Shape

→ p. 260

L × W × Internal depth	article no.
600 × 495 × 120	A170
600 × 495 × 120	A170 HLW1
800 × 495 × 120	A171
800 × 495 × 120	A171 HLW1
1000 × 495 × 120	A172
1000 × 495 × 120	A172 HLW1

BetteLux Oval Built-In

→ p. 262

L × W × Internal depth	article no.
500 × 500 × 100	A220
500 × 500 × 100	A220 HLW1

BetteLux Oval Couture

→ p. 264

L × W × Internal depth	article no.
500 × 500 × 100	A220 TX
500 × 500 × 100	A220 HLW1,TX

BetteOne Built-In

→ p. 266

L × W × Internal depth	article no.
600 × 495 × 130	A138
600 × 495 × 130	A138 HLW1
800 × 495 × 130	A139
800 × 495 × 130	A139 HLW1

BetteOne Undermounted

→ p. 268

L × W × Internal depth	article no.
434 × 416 × 130	A135
587 × 408 × 130	A136
767 × 400 × 130	A137

Baths

CO	BetteArco	p. 28
CO	BetteArt	p. 30
CO	BetteArt I	p. 32
CO	BetteArt IV	p. 34
CO	BetteArt V	p. 36
BA	BetteBambino	p. 38
BA	BetteClassic	p. 40
CO	BetteComodo	p. 42
CO	BetteComodo with side overflow	p. 44
CO	BetteDuett	p. 46
CO	BetteDuo	p. 48
CO	BetteEve	p. 50
CO	BetteEve Oval	p. 52
CO	BetteEve Oval Silhouette	p. 54
BA	BetteForm	p. 56
CO	BetteFree	p. 58
CO	BetteLoft	p. 60
CO	BetteLoft Ornament	p. 62
CO	BetteLuna	p. 64
CO	BetteLux	p. 66
CO	BetteLux I Silhouette Side	p. 72
CO	BetteLux IV Silhouette Side	p. 74
CO	BetteLux V Silhouette Side	p. 76
CO	BetteLux Oval	p. 80
CO	BetteLux Oval I Silhouette	p. 88
CO	BetteLux Oval IV Silhouette	p. 90
CO	BetteLux Oval V Silhouette	p. 92
CO	BetteLux Oval Couture	p. 82
CO	BetteLux Oval Highline	p. 84
CO	BetteLux Oval Silhouette	p. 86
CO	BetteLux Shape	p. 78
CO	BetteLux Silhouette	p. 68
CO	BetteLux Silhouette Side	p. 70
CO	BetteMetric	p. 94
CO	BetteOcean	p. 96
CO	BetteOcean Low-Line	p. 98
CO	BetteOne	p. 100
CO	BetteOne Relax	p. 102
CO	BettePond	p. 104
CO	BettePond Silhouette	p. 106
CO	BettePool I	p. 110
CO	BettePool I Panel	p. 112
CO	BettePool III	p. 114
CO	BettePool III Panel Corner Installation	p. 116
CO	BettePool Oval	p. 108
BA	BetteSelect	p. 118
BA	BetteSelect Duo	p. 122
BA	BetteSelect with side overflow	p. 120
BA	BetteSet	p. 124
CO	BetteSpace L	p. 130
CO	BetteSpace M	p. 128
CO	BetteSpace S	p. 126
CO	BetteStarlet	p. 132
CO	BetteStarlet I	p. 136
CO	BetteStarlet I Silhouette	p. 138
CO	BetteStarlet II	p. 140
CO	BetteStarlet IV	p. 142
CO	BetteStarlet IV Silhouette	p. 144
CO	BetteStarlet V	p. 146
CO	BetteStarlet V Silhouette	p. 148
CO	BetteStarlet Flair Oval	p. 150
CO	BetteStarlet Hexa	p. 152
CO	BetteStarlet Oval	p. 154
CO	BetteStarlet Oval Silhouette	p. 156
CO	BetteStarlet Spirit	p. 134
BA	BetteStep	p. 158
BA	LaBette	p. 160

Showers

CO	BetteAir	p. 164
CO	BetteCaro 35 mm, same shank length	p. 186
CO	BetteCorner 35 mm, different shank length	p. 190
CO	BetteCorner 35 mm, same shank length	p. 188
BA	BetteDelta 800 mm - 900 mm	p. 192
BA	BetteDelta 1000 mm - 1200 mm	p. 194
CO	BetteFlat	p. 166
CO	BetteFloor 800 mm - 1000 mm	p. 168
CO	BetteFloor 1100 mm - 1200 mm	p. 170
CO	BetteFloor 1300 mm - 1500 mm	p. 172
CO	BetteFloor 1600 mm - 1800 mm	p. 174
CO	BetteFloor Caro	p. 176
CO	BetteFloor Corner	p. 178
CO	BetteFloor Side 900 mm - 1200 mm	p. 180
CO	BetteFloor Side 1300 mm - 1500 mm	p. 182
CO	BetteFloor Side 1600 mm - 1800 mm	p. 184
BA	BetteQuinta 700 mm - 900 mm	p. 196
BA	BetteQuinta 1000 mm - 1200 mm	p. 198
CO	BetteSupra 700 mm - 850 mm	p. 200
CO	BetteSupra = 900 mm	p. 202
CO	BetteSupra 1000 mm - 1100 mm	p. 204
CO	BetteSupra 1200 mm - 1300 mm	p. 206
CO	BetteSupra 1400 mm - 1500 mm	p. 208
CO	BetteSupra 1600 mm - 1800 mm	p. 210
CO	BetteSupra with polystyrene support	p. 212
CO	BetteUltra 700 mm - 850 mm	p. 214
CO	BetteUltra = 900 mm	p. 216
CO	BetteUltra = 1000 mm	p. 218
CO	BetteUltra 1050 mm - 1100 mm	p. 220
CO	BetteUltra = 1200 mm	p. 222
CO	BetteUltra 1300 mm - 1400 mm	p. 224
CO	BetteUltra = 1500 mm	p. 226
CO	BetteUltra 1600 mm - 2000 mm	p. 228
CO	BetteUltra with polystyrene support	p. 230

Washbasins

CO	BetteAqua Built-In	p. 234
CO	BetteArt Counter Top	p. 236
CO	BetteArt Monolith	p. 238
CO	BetteComodo Built-In	p. 240
CO	BetteComodo Undermounted	p. 242
CO	BetteComodo Undermounted with overflow	p. 244
CO	BetteCraft Shell	p. 246
CO	BetteLoft Built-In	p. 248
CO	BetteLoft Ornament Wall Mounted, 1 row	p. 254
CO	BetteLoft Ornament Wall Mounted, 4 rows	p. 256
CO	BetteLoft Undermounted	p. 250
CO	BetteLoft Undermounted with overflow	p. 252
CO	BetteLux Built-In	p. 258
CO	BetteLux Oval Built-In	p. 262
CO	BetteLux Oval Couture	p. 264
CO	BetteLux Shape	p. 260
CO	BetteOne Built-In	p. 266
CO	BetteOne Undermounted	p. 268

Extras

EX	Antinoise System	p. 275
EX	BetteAnti-Slip Pro	p. 272
EX	BetteAnti-Slip Sense	p. 273
EX	BetteGlaze® Plus	p. 274
EX	BetteUpstand	p. 280
EX	BetteUpstand installation aid	p. 283
EX	BetteUpstand ordering aid	p. 281
EX	BetteUpstand shortened	p. 282
EX	BetteUpstand tailor-made	p. 282
EX	Drillings	p. 276
EX	Individual laser logo	p. 274
EX	Minimum support	p. 277
EX	Minimum-support for BetteAir	p. 278
EX	Overview BetteUpstand, Special size, Profi Corner	p. 288
EX	Overview Extras	p. 298
EX	Profi Corner	p. 284
EX	Profi Corner ordering aid	p. 285
EX	Special depth	p. 274
EX	Special size	p. 286

Waste and overflow

IN	Waste fittings shower trays / shower areas	p. 302
IN	Waste- and overflow fittings for baths	p. 312
CP	Hair Trap for wastes	p. 308
IN	BetteSensory	p. 338
CP	Spare covers waste fittings shower areas / shower trays	p. 309

Mounting aid

IN	Bath divider	p. 359
IN	Feet	p. 342
IN	Foam Central Support System	p. 358
IN	Foot-System	p. 348
IN	Installation Box BetteAir	p. 340
IN	Installation box BetteAir installation aid	p. 341
IN	Installation planning flush-to-floor showers	p. 346
IN	Minimum support Flex	p. 347
IN	Planning help installation systems	p. 344
IN	Planning help installation systems	p. 345
IN	Sealing Set BetteUpstand installation flush-to-floor	p. 357
IN	Sealing System	p. 356
IN	Sound insulation set	p. 359
IN	Wall brackets	p. 360

Washbasin Accessories

CP	Overflow cover	p. 364
IN	Pushwaste	p. 364
CP	Spare cover	p. 363
IN	Unslotted Waste	p. 362
IN	Waste- and overflow fitting BetteFlow	p. 365

Equipment / surface

CP	Blind plugs for grip holes	p. 369
IN	Grips	p. 366
IN	LED-Colour Spot Light	p. 370
CP	Relax Bath cushion	p. 371

Cleaning products

CP	Bath Rubber	p. 373
CP	Enamel-Cleaner	p. 372
CP	Care Cloth	p. 373
CP	Disinfection liquid	p. 374
CP	Enamel Spray Cleaner	p. 372
CP	Remalle	p. 374

Furniture

IN	Standing Mirror	p. 376
IN	Stool	p. 377
IN	Towel Rail	p. 376
IN	Wooden Inserts	p. 377

Whirlsystems

IN	BetteAirjet Plus Whirlsystem	p. 382
IN	BetteJet Whirlsystem	p. 383
IN	BetteSpa Whirlsystem	p. 384
IN	Whirlsystem Disinfection	p. 370

Rectangular baths

1050 × 650 mm	BetteStep	p. 158
1080 × 730 mm	LaBette	p. 160
1180 × 730 mm	BetteStep	p. 158
	LaBette	p. 160
1200 × 700 mm	LaBette	p. 160
1240 × 700 mm	LaBette	p. 160
1300 × 700 mm	LaBette	p. 160
1400 × 700 mm	BetteClassic	p. 40
	BetteForm	p. 56
1500 × 700 mm	BetteClassic	p. 40
	BetteForm	p. 56
	BetteOcean - foot end right, overflow rear	p. 96
	BetteOcean - foot end right, overflow front	p. 96
	BetteOcean Low-Line - foot end right, overflow rear	p. 98
	BetteOcean Low-Line - foot end right, overflow front	p. 98
1500 × 750 mm	BetteSet	p. 124
1500 × 800 mm	BetteStarlet	p. 132
1570 × 700 mm	BetteStarlet	p. 132
1600 × 650 mm	BetteStarlet	p. 132
1600 × 700 mm	BetteClassic	p. 40
	BetteForm	p. 56
	BetteOcean - foot end right, overflow rear	p. 96
	BetteOcean - foot end right, overflow front	p. 96
	BetteOcean Low-Line - foot end right, overflow rear	p. 98
	BetteOcean Low-Line - foot end right, overflow front	p. 98
	BetteOne	p. 100
	BetteSelect	p. 118
	BetteSelect with side overflow - foot end right, overflow front	p. 120
	BetteSelect with side overflow - foot end right, overflow rear	p. 120
	BetteSet	p. 124
	BetteStarlet	p. 132
1600 × 750 mm	BetteClassic	p. 40
	BetteForm	p. 56
	BetteSet	p. 124
1650 × 700 mm	BetteStarlet	p. 132
1650 × 750 mm	BetteClassic	p. 40
	BetteForm	p. 56
	BetteSet	p. 124
1700 × 700 mm	BetteClassic	p. 40
	BetteForm	p. 56
	BetteOcean - foot end right, overflow rear	p. 96
	BetteOcean - foot end right, overflow front	p. 96
	BetteOcean Low-Line - foot end right, overflow rear	p. 98
	BetteOcean Low-Line - foot end right, overflow front	p. 98
	BetteOne	p. 100
	BetteSelect	p. 118
	BetteSelect with side overflow - foot end right, overflow front	p. 120
	BetteSelect with side overflow - foot end right, overflow rear	p. 120
	BetteStarlet	p. 132
1700 × 730 mm	BetteClassic	p. 40
	BetteForm	p. 56
1700 × 750 mm	BetteClassic	p. 40
	BetteComodo	p. 42
	BetteComodo with side overflow - foot end right, overflow front	p. 44
	BetteComodo with side overflow - foot end right, overflow rear	p. 44
	BetteDuett	p. 46
	BetteForm	p. 56
	BetteFree	p. 58
	BetteLux	p. 66
	BetteLux Shape	p. 78
	BetteLux Silhouette	p. 68
	BetteOcean - foot end right, overflow rear	p. 96
	BetteOcean - foot end right, overflow front	p. 96
	BetteOcean Low-Line - foot end right, overflow rear	p. 98
	BetteOcean Low-Line - foot end right, overflow front	p. 98
	BetteOne	p. 100
	BetteSelect	p. 118
	BetteSelect Duo	p. 122
	BetteSelect with side overflow - foot end right, overflow front	p. 120
	BetteSelect with side overflow - foot end right, overflow rear	p. 120
	BetteSet	p. 124
	BetteStarlet	p. 132
	BetteStarlet Spirit	p. 134
1700 × 800 mm	BetteClassic	p. 40
	BetteComodo	p. 42
	BetteComodo with side overflow - foot end right, overflow front	p. 44
	BetteComodo with side overflow - foot end right, overflow rear	p. 44
	BetteDuett	p. 46
	BetteForm	p. 56
	BetteLoft	p. 60
	BetteOcean - foot end right, overflow rear	p. 96
	BetteOcean - foot end right, overflow front	p. 96
	BetteOcean Low-Line - foot end right, overflow rear	p. 98
	BetteOcean Low-Line - foot end right, overflow front	p. 98
	BetteSet	p. 124
1700 × 850 mm	BetteLux Silhouette Side	p. 70
	BetteLux I Silhouette Side	p. 72
	BetteLux IV Silhouette Side	p. 74
	BetteLux V Silhouette Side	p. 76
1750 × 750 mm	BetteClassic	p. 40
	BetteForm	p. 56
1750 × 800 mm	BetteStarlet	p. 132
1800 × 700 mm	BetteClassic	p. 40
1800 × 750 mm	BetteClassic	p. 40
	BetteStarlet	p. 132

1800 × 800 mm	BetteClassic	p. 40
	BetteComodo	p. 42
	BetteComodo with side overflow - foot end right, overflow front	p. 44
	BetteComodo with side overflow - foot end right, overflow rear	p. 44
	BetteDuo	p. 48
	BetteForm	p. 56
	BetteFree	p. 58
	BetteLoft	p. 60
	BetteLux	p. 66
	BetteLux Shape	p. 78
	BetteLux Silhouette	p. 68
	BetteOcean - foot end right, overflow rear	p. 96
	BetteOcean - foot end right, overflow front	p. 96
	BetteOcean Low-Line - foot end right, overflow rear	p. 98
	BetteOcean Low-Line - foot end right, overflow front	p. 98
	BetteOne	p. 100
	BetteOne Relax	p. 102
	BetteSelect	p. 118
	BetteSelect Duo	p. 122
	BetteSelect with side overflow - foot end right, overflow front	p. 120
	BetteSelect with side overflow - foot end right, overflow rear	p. 120
	BetteSet	p. 124
	BetteStarlet	p. 132
	BetteStarlet Spirit	p. 134
1800 × 900 mm	BetteLux Silhouette Side	p. 70
	BetteLux I Silhouette Side	p. 72
	BetteLux IV Silhouette Side	p. 74
	BetteLux V Silhouette Side	p. 76
1800 × 1000 mm	BetteEve	p. 50
1810 × 810 mm	BetteLoft Ornament	p. 62
1850 × 850 mm	BetteStarlet	p. 132
1900 × 800 mm	BetteClassic	p. 40
	BetteForm	p. 56
1900 × 900 mm	BetteComodo	p. 42
	BetteComodo with side overflow - foot end right, overflow front	p. 44
	BetteComodo with side overflow - foot end right, overflow rear	p. 44
	BetteFree	p. 58
	BetteLoft	p. 60
	BetteLux	p. 66
	BetteLux Shape	p. 78
	BetteOne	p. 100
	BetteOne Relax	p. 102
	BetteStarlet	p. 132
2000 × 900 mm	BetteOne Relax	p. 102
2000 × 1000 mm	BetteFree	p. 58

Oval baths

1500 × 800 mm	BetteStarlet Oval	p. 154
	BetteStarlet Oval Silhouette	p. 156
1500 × 1500 mm	BettePond	p. 104
	BettePond Silhouette	p. 106
1580 × 680 mm	BetteStarlet Flair Oval	p. 150
1641 × 960 mm	BettePool Oval	p. 108
1650 × 750 mm	BetteStarlet Oval	p. 154
	BetteStarlet Oval Silhouette	p. 156
1680 × 730 mm	BetteStarlet Flair Oval	p. 150
1700 × 750 mm	BetteLux Oval	p. 80
	BetteLux Oval Silhouette	p. 86
1750 × 800 mm	BetteStarlet Oval	p. 154
	BetteStarlet Oval Silhouette	p. 156
1780 × 780 mm	BetteStarlet Flair Oval	p. 150
1800 × 800 mm	BetteLux Oval	p. 80
	BetteLux Oval Couture	p. 82
	BetteLux Oval Highline	p. 84
	BetteLux Oval Silhouette	p. 86
1800 × 1000 mm	BetteEve Oval	p. 52
	BetteEve Oval Silhouette	p. 54
1805 × 755 mm	BetteArt	p. 30
1850 × 850 mm	BetteStarlet Oval	p. 154
	BetteStarlet Oval Silhouette	p. 156
1880 × 880 mm	BetteStarlet Flair Oval	p. 150
1900 × 900 mm	BetteLux Oval	p. 80
	BetteLux Oval Highline	p. 84
	BetteLux Oval Silhouette	p. 86
1950 × 950 mm	BetteStarlet Oval	p. 154
	BetteStarlet Oval Silhouette	p. 156

Hexagonal baths

1880 × 700 mm	BetteStarlet Hexa	p. 152
2000 × 750 mm	BetteStarlet Hexa	p. 152
2060 × 900 mm	BetteMetric - foot end right, overflow front	p. 94
	BetteMetric - foot end left, overflow front	p. 94
2100 × 800 mm	BetteStarlet Hexa	p. 152

Baths with apron

1500 × 800 mm	BetteStarlet Oval Silhouette	p. 156
1500 × 1500 mm	BettePond Silhouette	p. 106
1598 × 1130 mm	BettePool III Panel Corner Installation - left	p. 116
	BettePool III Panel Corner Installation - right	p. 116
1605 × 1022 mm	BettePool I Panel - left	p. 112
	BettePool I Panel - right	p. 112
1650 × 750 mm	BetteStarlet I Silhouette	p. 138
	BetteStarlet IV Silhouette	p. 144
	BetteStarlet V Silhouette	p. 148
	BetteStarlet Oval Silhouette	p. 156
1700 × 750 mm	BetteLux Oval Silhouette	p. 86
	BetteLux Silhouette	p. 68
1700 × 800 mm	BetteLux Oval I Silhouette	p. 88
1700 × 850 mm	BetteLux Silhouette Side	p. 70
	BetteLux I Silhouette Side	p. 72
	BetteLux IV Silhouette Side	p. 74
	BetteLux V Silhouette Side	p. 76
1750 × 800 mm	BetteLux Oval IV Silhouette	p. 90
	BetteLux Oval V Silhouette	p. 92
	BetteStarlet I Silhouette	p. 138
	BetteStarlet IV Silhouette	p. 144
	BetteStarlet V Silhouette	p. 148
	BetteStarlet Oval Silhouette	p. 156
1800 × 800 mm	BetteLux Oval Highline	p. 84
	BetteLux Oval Silhouette	p. 86
	BetteLux Silhouette	p. 68
1800 × 850 mm	BetteLux Oval I Silhouette	p. 88
1800 × 900 mm	BetteLux Silhouette Side	p. 70
	BetteLux I Silhouette Side	p. 72
	BetteLux IV Silhouette Side	p. 74
	BetteLux V Silhouette Side	p. 76
1800 × 1000 mm	BetteEve Oval Silhouette	p. 54
1805 × 755 mm	BetteArt	p. 30
1805 × 800 mm	BetteArt I	p. 32
1810 × 810 mm	BetteLoft Ornament	p. 62
1850 × 800 mm	BetteArt IV	p. 34
	BetteArt V	p. 36
1850 × 850 mm	BetteLux Oval IV Silhouette	p. 90
	BetteLux Oval V Silhouette	p. 92
	BetteStarlet I Silhouette	p. 138
	BetteStarlet IV Silhouette	p. 144
	BetteStarlet V Silhouette	p. 148
	BetteStarlet Oval Silhouette	p. 156
1900 × 900 mm	BetteLux Oval Highline	p. 84
	BetteLux Oval Silhouette	p. 86
1900 × 950 mm	BetteLux Oval I Silhouette	p. 88
1950 × 950 mm	BetteLux Oval IV Silhouette	p. 90
	BetteLux Oval V Silhouette	p. 92
	BetteStarlet I Silhouette	p. 138
	BetteStarlet IV Silhouette	p. 144
	BetteStarlet V Silhouette	p. 148
	BetteStarlet Oval Silhouette	p. 156

Corner baths

1400 × 1400 mm	BetteArco	p. 28
1598 × 1130 mm	BettePool III - left	p. 114
	BettePool III - right	p. 114
	BettePool III Panel Corner Installation - left	p. 116
	BettePool III Panel Corner Installation - right	p. 116
1605 × 1022 mm	BettePool I - left	p. 110
	BettePool I - right	p. 110
1650 × 750 mm	BetteStarlet IV Silhouette	p. 144
	BetteStarlet V Silhouette	p. 148
1700 × 850 mm	BetteLux IV Silhouette Side	p. 74
1750 × 800 mm	BetteLux Oval IV Silhouette	p. 90
	BetteLux Oval V Silhouette	p. 92
	BetteStarlet IV Silhouette	p. 144
	BetteStarlet V Silhouette	p. 148
1800 × 900 mm	BetteLux IV Silhouette Side	p. 74
1850 × 800 mm	BetteArt IV	p. 34
	BetteArt V	p. 36
1850 × 850 mm	BetteLux Oval IV Silhouette	p. 90
	BetteLux Oval V Silhouette	p. 92
	BetteStarlet IV Silhouette	p. 144
	BetteStarlet V Silhouette	p. 148
1950 × 950 mm	BetteLux Oval IV Silhouette	p. 90
	BetteLux Oval V Silhouette	p. 92
	BetteStarlet IV Silhouette	p. 144
	BetteStarlet V Silhouette	p. 148

Free-standing baths

1500 × 800 mm	BetteStarlet Oval Silhouette	p. 156
1500 × 1500 mm	BettePond Silhouette	p. 106
1650 × 750 mm	BetteStarlet Oval Silhouette	p. 156
1700 × 750 mm	BetteLux Oval Silhouette	p. 86
	BetteLux Shape	p. 78
	BetteLux Silhouette	p. 68
1700 × 850 mm	BetteLux Silhouette Side	p. 70
1750 × 800 mm	BetteStarlet Oval Silhouette	p. 156
1800 × 800 mm	BetteLux Oval Couture	p. 82
	BetteLux Oval Silhouette	p. 86
	BetteLux Shape	p. 78
	BetteLux Silhouette	p. 68
1800 × 900 mm	BetteLux Silhouette Side	p. 70
1800 × 1000 mm	BetteEve Oval Silhouette	p. 54
1805 × 755 mm	BetteArt	p. 30
1810 × 810 mm	BetteLoft Ornament	p. 62
1850 × 850 mm	BetteStarlet Oval Silhouette	p. 156
1900 × 900 mm	BetteLux Oval Silhouette	p. 86
	BetteLux Shape	p. 78
1950 × 950 mm	BetteStarlet Oval Silhouette	p. 156

Mini baths

1050 × 650 mm	BetteStep	p. 158
1080 × 730 mm	LaBette	p. 160
1180 × 730 mm	BetteStep	p. 158
	LaBette	p. 160
1200 × 700 mm	LaBette	p. 160
1240 × 700 mm	LaBette	p. 160
1300 × 700 mm	LaBette	p. 160
1570 × 650 mm	BetteBambino - left	p. 38
	BetteBambino - right	p. 38
1570 × 700 mm	BetteBambino - left	p. 38
	BetteBambino - right	p. 38
1700 × 750 mm	BetteLuna - left	p. 64
	BetteLuna - right	p. 64
	BetteSpace S - left	p. 126
	BetteSpace S - right	p. 126
1700 × 900 mm	BetteSpace M - left	p. 128
	BetteSpace M - right	p. 128

Bath and shower combinations

1400 × 700 mm	BetteClassic	p. 40
	BetteForm	p. 56
1500 × 700 mm	BetteClassic	p. 40
	BetteForm	p. 56
	BetteOcean - foot end right, overflow rear	p. 96
	BetteOcean - foot end right, overflow front	p. 96
	BetteOcean Low-Line - foot end right, overflow rear	p. 98
	BetteOcean Low-Line - foot end right, overflow front	p. 98
1500 × 750 mm	BetteSet	p. 124
1600 × 700 mm	BetteClassic	p. 40
	BetteForm	p. 56
	BetteOcean - foot end right, overflow rear	p. 96
	BetteOcean - foot end right, overflow front	p. 96
	BetteOcean Low-Line - foot end right, overflow rear	p. 98
	BetteOcean Low-Line - foot end right, overflow front	p. 98
	BetteSelect	p. 118
	BetteSelect with side overflow - foot end right, overflow front	p. 120
	BetteSelect with side overflow - foot end right, overflow rear	p. 120
	BetteSet	p. 124
1600 × 750 mm	BetteClassic	p. 40
	BetteForm	p. 56
	BetteSet	p. 124
1650 × 750 mm	BetteClassic	p. 40
	BetteForm	p. 56
	BetteSet	p. 124
1700 × 700 mm	BetteClassic	p. 40
	BetteForm	p. 56
	BetteOcean - foot end right, overflow rear	p. 96
	BetteOcean - foot end right, overflow front	p. 96
	BetteOcean Low-Line - foot end right, overflow rear	p. 98
	BetteOcean Low-Line - foot end right, overflow front	p. 98
	BetteSelect	p. 118
	BetteSelect with side overflow - foot end right, overflow front	p. 120
	BetteSelect with side overflow - foot end right, overflow rear	p. 120
1700 × 730 mm	BetteClassic	p. 40
	BetteForm	p. 56
1700 × 750 mm	BetteClassic	p. 40
	BetteComodo	p. 42
	BetteForm	p. 56
	BetteOcean - foot end right, overflow rear	p. 96
	BetteOcean - foot end right, overflow front	p. 96
	BetteOcean Low-Line - foot end right, overflow rear	p. 98
	BetteOcean Low-Line - foot end right, overflow front	p. 98
	BetteSelect	p. 118
	BetteSelect with side overflow - foot end right, overflow front	p. 120

1700 × 750 mm	BetteSelect with side overflow - foot end right, overflow rear	p. 120
	BetteSet	p. 124
1700 × 800 mm	BetteClassic	p. 40
	BetteComodo	p. 42
	BetteForm	p. 56
	BetteOcean - foot end right, overflow rear	p. 96
	BetteOcean - foot end right, overflow front	p. 96
	BetteOcean Low-Line - foot end right, overflow rear	p. 98
	BetteOcean Low-Line - foot end right, overflow front	p. 98
	BetteSet	p. 124
1700 × 900 mm	BetteSpace M - left	p. 128
	BetteSpace M - right	p. 128
1750 × 750 mm	BetteClassic	p. 40
	BetteForm	p. 56
1800 × 700 mm	BetteClassic	p. 40
1800 × 750 mm	BetteClassic	p. 40
1800 × 800 mm	BetteClassic	p. 40
	BetteComodo	p. 42
	BetteForm	p. 56
	BetteOcean - foot end right, overflow rear	p. 96
	BetteOcean - foot end right, overflow front	p. 96
	BetteOcean Low-Line - foot end right, overflow rear	p. 98
	BetteOcean Low-Line - foot end right, overflow front	p. 98
	BetteSelect	p. 118
	BetteSelect with side overflow - foot end right, overflow front	p. 120
	BetteSelect with side overflow - foot end right, overflow rear	p. 120
	BetteSet	p. 124
1900 × 800 mm	BetteClassic	p. 40
	BetteForm	p. 56
1900 × 900 mm	BetteComodo	p. 42

Special baths

1500 × 1500 mm	BettePond	p. 104
	BettePond Silhouette	p. 106
1570 × 650 mm	BetteBambino - left	p. 38
	BetteBambino - right	p. 38
1570 × 700 mm	BetteBambino - left	p. 38
	BetteBambino - right	p. 38
1605 × 1022 mm	BettePool I - left	p. 110
	BettePool I - right	p. 110
	BettePool I Panel - left	p. 112
	BettePool I Panel - right	p. 112
1650 × 750 mm	BetteStarlet I	p. 136
	BetteStarlet I Silhouette	p. 138
	BetteStarlet II	p. 140
	BetteStarlet IV	p. 142
	BetteStarlet IV Silhouette	p. 144
	BetteStarlet V	p. 146
	BetteStarlet V Silhouette	p. 148
1700 × 750 mm	BetteLuna - left	p. 64
	BetteLuna - right	p. 64
	BetteSpace S - left	p. 126
	BetteSpace S - right	p. 126
1700 × 800 mm	BetteLux Oval I Silhouette	p. 88
1700 × 900 mm	BetteSpace M - left	p. 128
	BetteSpace M - right	p. 128
1700 × 1300 mm	BetteSpace L - left	p. 130
	BetteSpace L - right	p. 130
1750 × 800 mm	BetteLux Oval IV Silhouette	p. 90
	BetteLux Oval V Silhouette	p. 92
	BetteStarlet I	p. 136
	BetteStarlet I Silhouette	p. 138
	BetteStarlet II	p. 140
	BetteStarlet IV	p. 142
	BetteStarlet IV Silhouette	p. 144
	BetteStarlet V	p. 146
	BetteStarlet V Silhouette	p. 148
1800 × 850 mm	BetteLux Oval I Silhouette	p. 88
1805 × 800 mm	BetteArt I	p. 32
1850 × 800 mm	BetteArt IV	p. 34
	BetteArt V	p. 36
1850 × 850 mm	BetteLux Oval IV Silhouette	p. 90
	BetteLux Oval V Silhouette	p. 92
	BetteStarlet I	p. 136
	BetteStarlet I Silhouette	p. 138
	BetteStarlet II	p. 140
	BetteStarlet IV	p. 142
	BetteStarlet IV Silhouette	p. 144
	BetteStarlet V	p. 146
	BetteStarlet V Silhouette	p. 148
1900 × 950 mm	BetteLux Oval I Silhouette	p. 88
1950 × 950 mm	BetteLux Oval IV Silhouette	p. 90
	BetteLux Oval V Silhouette	p. 92
	BetteStarlet I Silhouette	p. 138
	BetteStarlet IV Silhouette	p. 144
	BetteStarlet V Silhouette	p. 148

Undermounted baths

1050 × 650 mm	BetteStep	p. 158
1080 × 730 mm	LaBette	p. 160
1180 × 730 mm	BetteStep	p. 158
	LaBette	p. 160
1240 × 700 mm	LaBette	p. 160
1300 × 700 mm	LaBette	p. 160
1400 × 700 mm	BetteClassic	p. 40
	BetteForm	p. 56
1400 × 1400 mm	BetteArco	p. 28
1500 × 700 mm	BetteClassic	p. 40
	BetteForm	p. 56
	BetteOcean - foot end right, overflow rear	p. 96
	BetteOcean - foot end right, overflow front	p. 96
	BetteOcean Low-Line - foot end right, overflow rear	p. 98
	BetteOcean Low-Line - foot end right, overflow front	p. 98
1500 × 750 mm	BetteSet	p. 124
1500 × 800 mm	BetteStarlet	p. 132
	BetteStarlet Oval	p. 154
1570 × 650 mm	BetteBambino - left	p. 38
	BetteBambino - right	p. 38
1570 × 700 mm	BetteBambino - left	p. 38
	BetteBambino - right	p. 38
1600 × 700 mm	BetteClassic	p. 40
	BetteForm	p. 56
	BetteOne	p. 100
	BetteSelect	p. 118
	BetteSet	p. 124
	BetteStarlet	p. 132
1600 × 750 mm	BetteClassic	p. 40
	BetteForm	p. 56
	BetteSet	p. 124
1641 × 960 mm	BettePool Oval	p. 108
1650 × 750 mm	BetteStarlet Oval	p. 154
1700 × 700 mm	BetteClassic	p. 40
	BetteForm	p. 56
	BetteOne	p. 100
	BetteSelect	p. 118
1700 × 750 mm	BetteDuett	p. 46
	BetteForm	p. 56
	BetteLuna - left	p. 64
	BetteLuna - right	p. 64
	BetteOcean - foot end right, overflow rear	p. 96
	BetteOcean - foot end right, overflow front	p. 96
	BetteOcean Low-Line - foot end right, overflow rear	p. 98
	BetteOcean Low-Line - foot end right, overflow front	p. 98
	BetteSelect Duo	p. 122
	BetteSpace S - left	p. 126
	BetteSpace S - right	p. 126
	BetteStarlet	p. 132
1700 × 800 mm	BetteComodo	p. 42
	BetteOcean - foot end right, overflow rear	p. 96
	BetteOcean - foot end right, overflow front	p. 96
	BetteOcean Low-Line - foot end right, overflow rear	p. 98
	BetteOcean Low-Line - foot end right, overflow front	p. 98
1700 × 900 mm	BetteSpace M - left	p. 128
	BetteSpace M - right	p. 128
1700 × 1300 mm	BetteSpace L - left	p. 130
	BetteSpace L - right	p. 130
1750 × 800 mm	BetteStarlet Oval	p. 154
1800 × 700 mm	BetteClassic	p. 40
1800 × 800 mm	BetteDuo	p. 48
	BetteForm	p. 56
	BetteOne	p. 100
	BetteOne Relax	p. 102
	BetteSelect	p. 118
	BetteSelect Duo	p. 122
	BetteSet	p. 124
	BetteStarlet	p. 132
1850 × 850 mm	BetteStarlet Oval	p. 154
1900 × 800 mm	BetteClassic	p. 40
	BetteForm	p. 56
1900 × 900 mm	BetteOne	p. 100
	BetteOne Relax	p. 102
	BetteStarlet	p. 132
1950 × 950 mm	BetteStarlet Oval	p. 154
2000 × 900 mm	BetteOne Relax	p. 102

Rectangular shower trays

700 × 700 mm	BetteUltra 700-900 mm	p. 214
	BetteSupra 700-900 mm	p. 200
	BetteQuinta 700-900 mm	p. 196
750 × 700 mm	BetteSupra 700-900 mm	p. 200
	BetteQuinta 700-900 mm	p. 196
750 × 750 mm	BetteUltra 700-900 mm	p. 214
	BetteSupra 700-900 mm	p. 200
	BetteQuinta 700-900 mm	p. 196
800 × 700 mm	BetteUltra 700-900 mm	p. 214
	BetteSupra 700-900 mm	p. 200
	BetteQuinta 700-900 mm	p. 196
800 × 750 mm	BetteUltra 700-900 mm	p. 214
	BetteSupra 700-900 mm	p. 200
	BetteQuinta 700-900 mm	p. 196
	BetteDelta 800-900 mm	p. 192
800 × 800 mm	BetteFloor	p. 168
	BetteUltra 700-900 mm	p. 214
	BetteUltra with polystyrene support	p. 230
	BetteSupra 700-900 mm	p. 200
	BetteSupra with polystyrene support	p. 212
	BetteQuinta 700-900 mm	p. 196
	BetteDelta 800-900 mm	p. 192
850 × 700 mm	BetteSupra 700-900 mm	p. 200
	BetteQuinta 700-900 mm	p. 196
850 × 750 mm	BetteSupra 700-900 mm	p. 200
	BetteQuinta 700-900 mm	p. 196
850 × 850 mm	BetteUltra 700-900 mm	p. 214
	BetteSupra 700-900 mm	p. 200
	BetteQuinta 700-900 mm	p. 196
900 × 600 mm	BetteUltra 700-900 mm	p. 216
	BetteSupra 700-900 mm	p. 202
	BetteQuinta 700-900 mm	p. 196
900 × 700 mm	BetteFloor	p. 168
	BetteUltra 700-900 mm	p. 216
	BetteUltra with polystyrene support	p. 230
	BetteSupra 700-900 mm	p. 202
	BetteSupra with polystyrene support	p. 212
	BetteQuinta 700-900 mm	p. 196
	BetteDelta 800-900 mm	p. 192
900 × 750 mm	BetteFloor	p. 168
	BetteUltra 700-900 mm	p. 216
	BetteUltra with polystyrene support	p. 230
	BetteSupra 700-900 mm	p. 202
	BetteSupra with polystyrene support	p. 212
	BetteQuinta 700-900 mm	p. 196
	BetteDelta 800-900 mm	p. 192
900 × 800 mm	BetteFloor	p. 168
	BetteUltra 700-900 mm	p. 216
	BetteUltra with polystyrene support	p. 230
	BetteSupra 700-900 mm	p. 202
	BetteQuinta 700-900 mm	p. 196
	BetteDelta 800-900 mm	p. 192
900 × 850 mm	BetteUltra 700-900 mm	p. 216
	BetteSupra 700-900 mm	p. 202
	BetteQuinta 700-900 mm	p. 196
900 × 900 mm	BetteAir	p. 164
	BetteFloor	p. 168
	BetteFloor Side	p. 180
	BetteUltra 700-900 mm	p. 216
	BetteUltra with polystyrene support	p. 230
	BetteSupra 700-900 mm	p. 202
	BetteSupra with polystyrene support	p. 212
	BetteQuinta 700-900 mm	p. 196
	BetteDelta 800-900 mm	p. 192
1000 × 700 mm	BetteFloor	p. 168
	BetteUltra with polystyrene support	p. 230
	BetteUltra 1000 mm	p. 218
	BetteSupra 1000-1500 mm	p. 204
	BetteQuinta 1000-1200 mm	p. 198
1000 × 750 mm	BetteFloor	p. 168
	BetteUltra with polystyrene support	p. 230
	BetteUltra 1000 mm	p. 218
	BetteSupra 1000-1500 mm	p. 204
	BetteQuinta 1000-1200 mm	p. 198
1000 × 800 mm	BetteFloor	p. 168
	BetteFloor Side	p. 180
	BetteUltra with polystyrene support	p. 230
	BetteUltra 1000 mm	p. 218
	BetteSupra with polystyrene support	p. 212
	BetteSupra 1000-1500 mm	p. 204
	BetteQuinta 1000-1200 mm	p. 198
	BetteDelta 1000-1200 mm	p. 194
1000 × 900 mm	BetteAir	p. 164
	BetteFloor	p. 168
	BetteFloor Side	p. 180
	BetteUltra 1000 mm	p. 218
	BetteSupra 1000-1500 mm	p. 204
	BetteQuinta 1000-1200 mm	p. 198
1000 × 1000 mm	BetteAir	p. 164
	BetteFloor	p. 168
	BetteFloor Side	p. 180
	BetteUltra with polystyrene support	p. 230
	BetteUltra 1000 mm	p. 218
	BetteSupra with polystyrene support	p. 212
	BetteSupra 1000-1500 mm	p. 204
	BetteQuinta 1000-1200 mm	p. 198
	BetteDelta 1000-1200 mm	p. 194
1050 × 750 mm	BetteUltra 1050-1500 mm	p. 220
	BetteSupra 1000-1500 mm	p. 204
	BetteQuinta 1000-1200 mm	p. 198
1100 × 700 mm	BetteUltra 1050-1500 mm	p. 220
	BetteSupra 1000-1500 mm	p. 204
1100 × 750 mm	BetteFloor	p. 170
	BetteUltra 1050-1500 mm	p. 220
	BetteSupra 1000-1500 mm	p. 204
1100 × 800 mm	BetteFloor	p. 170
	BetteFloor Side	p. 180
	BetteUltra with polystyrene support	p. 230
	BetteUltra 1050-1500 mm	p. 220
	BetteSupra 1000-1500 mm	p. 204
	BetteQuinta 1000-1200 mm	p. 198

1100 × 900 mm	BetteAir	p. 164
	BetteFloor	p. 170
	BetteFloor Side	p. 180
	BetteUltra with polystyrene support	p. 230
	BetteUltra 1050-1500 mm	p. 220
	BetteSupra 1000-1500 mm	p. 204
	BetteQuinta 1000-1200 mm	p. 198
1100 × 1000 mm	BetteAir	p. 164
	BetteFloor	p. 170
	BetteUltra 1050-1500 mm	p. 220
	BetteSupra 1000-1500 mm	p. 204
1100 × 1100 mm	BetteUltra 1050-1500 mm	p. 220
	BetteSupra 1000-1500 mm	p. 204
1200 × 700 mm	BetteFloor	p. 170
	BetteUltra 1050-1500 mm	p. 222
	BetteSupra 1000-1500 mm	p. 206
	BetteQuinta 1000-1200 mm	p. 198
1200 × 750 mm	BetteFloor	p. 170
	BetteUltra with polystyrene support	p. 230
	BetteUltra 1050-1500 mm	p. 222
	BetteSupra 1000-1500 mm	p. 206
	BetteQuinta 1000-1200 mm	p. 198
1200 × 800 mm	BetteAir	p. 164
	BetteFloor	p. 170
	BetteFloor Side	p. 180
	BetteUltra with polystyrene support	p. 230
	BetteUltra 1050-1500 mm	p. 222
	BetteSupra 1000-1500 mm	p. 206
	BetteQuinta 1000-1200 mm	p. 198
	BetteDelta 1000-1200 mm	p. 194
1200 × 900 mm	BetteAir	p. 164
	BetteFloor	p. 170
	BetteFloor Side	p. 180
	BetteUltra with polystyrene support	p. 230
	BetteUltra 1050-1500 mm	p. 222
	BetteSupra 1000-1500 mm	p. 206
	BetteQuinta 1000-1200 mm	p. 198
1200 × 1000 mm	BetteAir	p. 164
	BetteFloor	p. 170
	BetteFloor Side	p. 180
	BetteUltra with polystyrene support	p. 230
	BetteUltra 1050-1500 mm	p. 222
	BetteSupra 1000-1500 mm	p. 206
	BetteQuinta 1000-1200 mm	p. 198
1200 × 1100 mm	BetteUltra 1050-1500 mm	p. 222
	BetteSupra 1000-1500 mm	p. 206
1200 × 1200 mm	BetteAir	p. 164
	BetteFloor	p. 170
	BetteFloor Side	p. 180
	BetteFlat	p. 166
	BetteUltra 1050-1500 mm	p. 222
	BetteSupra 1000-1500 mm	p. 206
	BetteQuinta 1000-1200 mm	p. 198
1300 × 700 mm	BetteUltra 1050-1500 mm	p. 224
1300 × 750 mm	BetteFloor	p. 172
	BetteUltra 1050-1500 mm	p. 224
1300 × 800 mm	BetteFloor	p. 172
	BetteUltra 1050-1500 mm	p. 224
	BetteSupra 1000-1500 mm	p. 206
1300 × 900 mm	BetteFloor	p. 172
	BetteFloor Side	p. 182
	BetteUltra 1050-1500 mm	p. 224
	BetteSupra 1000-1500 mm	p. 206
1300 × 1000 mm	BetteFloor	p. 172
	BetteFloor Side	p. 182
	BetteUltra 1050-1500 mm	p. 224
	BetteSupra 1000-1500 mm	p. 206
1300 × 1300 mm	BetteUltra 1050-1500 mm	p. 224
	BetteSupra 1000-1500 mm	p. 206
1400 × 700 mm	BetteFloor	p. 172
	BetteUltra 1050-1500 mm	p. 224
	BetteSupra 1000-1500 mm	p. 208
1400 × 750 mm	BetteFloor	p. 172
	BetteUltra 1050-1500 mm	p. 224
	BetteSupra 1000-1500 mm	p. 208
1400 × 800 mm	BetteFloor	p. 172
	BetteFloor Side	p. 182
	BetteUltra with polystyrene support	p. 230
	BetteUltra 1050-1500 mm	p. 224
	BetteSupra 1000-1500 mm	p. 208
1400 × 900 mm	BetteAir	p. 164
	BetteFloor	p. 172
	BetteFloor Side	p. 182
	BetteUltra with polystyrene support	p. 230
	BetteUltra 1050-1500 mm	p. 224
	BetteSupra 1000-1500 mm	p. 208
1400 × 1000 mm	BetteAir	p. 164
	BetteFloor	p. 172
	BetteFloor Side	p. 182
	BetteUltra 1050-1500 mm	p. 224
	BetteSupra 1000-1500 mm	p. 208
1400 × 1200 mm	BetteFloor Side	p. 182
1400 × 1400 mm	BetteUltra 1050-1500 mm	p. 224
	BetteSupra 1000-1500 mm	p. 208
1500 × 700 mm	BetteFloor	p. 172
	BetteUltra 1050-1500 mm	p. 226
	BetteSupra 1000-1500 mm	p. 208
1500 × 750 mm	BetteFloor	p. 172
	BetteUltra 1050-1500 mm	p. 226
	BetteSupra 1000-1500 mm	p. 208
1500 × 800 mm	BetteFloor	p. 172
	BetteUltra 1050-1500 mm	p. 226
	BetteSupra 1000-1500 mm	p. 208
1500 × 900 mm	BetteAir	p. 164
	BetteFloor	p. 172
	BetteFloor Side	p. 182
	BetteUltra with polystyrene support	p. 230
	BetteUltra 1050-1500 mm	p. 226
	BetteSupra 1000-1500 mm	p. 208
1500 × 1000 mm	BetteAir	p. 164
	BetteFloor	p. 172
	BetteFloor Side	p. 182
	BetteUltra 1050-1500 mm	p. 226
	BetteSupra 1000-1500 mm	p. 208

1500 × 1200 mm	BetteFloor Side	p. 182
1500 × 1500 mm	BetteUltra 1050-1500 mm	p. 226
	BetteSupra 1000-1500 mm	p. 208
1600 × 700 mm	BetteFloor	p. 174
	BetteUltra 1600-2000 mm	p. 228
	BetteSupra 1600-1800 mm	p. 210
1600 × 750 mm	BetteFloor	p. 174
	BetteUltra 1600-2000 mm	p. 228
	BetteSupra 1600-1800 mm	p. 210
1600 × 800 mm	BetteFloor	p. 174
	BetteFloor Side	p. 184
	BetteUltra 1600-2000 mm	p. 228
	BetteSupra 1600-1800 mm	p. 210
1600 × 900 mm	BetteAir	p. 164
	BetteFloor	p. 174
	BetteFloor Side	p. 184
	BetteUltra 1600-2000 mm	p. 228
	BetteSupra 1600-1800 mm	p. 210
1600 × 1000 mm	BetteAir	p. 164
	BetteFloor	p. 174
	BetteFloor Side	p. 184
	BetteUltra 1600-2000 mm	p. 228
	BetteSupra 1600-1800 mm	p. 210
1600 × 1200 mm	BetteFloor Side	p. 184
1700 × 700 mm	BetteUltra 1600-2000 mm	p. 228
	BetteSupra 1600-1800 mm	p. 210
1700 × 750 mm	BetteFloor	p. 174
	BetteUltra 1600-2000 mm	p. 228
	BetteSupra 1600-1800 mm	p. 210
1700 × 800 mm	BetteFloor	p. 174
	BetteUltra 1600-2000 mm	p. 228
	BetteSupra 1600-1800 mm	p. 210
1700 × 900 mm	BetteFloor	p. 174
	BetteFloor Side	p. 184
	BetteUltra 1600-2000 mm	p. 228
	BetteSupra 1600-1800 mm	p. 210
1700 × 1000 mm	BetteFloor	p. 174
	BetteUltra 1600-2000 mm	p. 228
	BetteSupra 1600-1800 mm	p. 210
1800 × 800 mm	BetteFloor	p. 174
	BetteUltra 1600-2000 mm	p. 228
	BetteSupra 1600-1800 mm	p. 210
1800 × 900 mm	BetteFloor	p. 174
	BetteFloor Side	p. 184
	BetteUltra 1600-2000 mm	p. 228
	BetteSupra 1600-1800 mm	p. 210
1800 × 1000 mm	BetteFloor	p. 174
	BetteFloor Side	p. 184
	BetteUltra 1600-2000 mm	p. 228
	BetteSupra 1600-1800 mm	p. 210
1900 × 900 mm	BetteUltra 1600-2000 mm	p. 228
2000 × 900 mm	BetteUltra 1600-2000 mm	p. 228

Quadrant shower trays

750 × 900 mm	BetteCorner 35 mm, different shank length	p. 190
800 × 800 mm	BetteCorner 35 mm, same shank length	p. 188
800 × 900 mm	BetteCorner 35 mm, different shank length	p. 190
900 × 750 mm	BetteCorner 35 mm, different shank length	p. 190
900 × 800 mm	BetteCorner 35 mm, different shank length	p. 190
900 × 900 mm	BetteFloor Corner	p. 178
	BetteCorner 35 mm, same shank length	p. 188
900 × 1000 mm	BetteCorner 35 mm, different shank length	p. 190
1000 × 900 mm	BetteCorner 35 mm, different shank length	p. 190
1000 × 1000 mm	BetteFloor Corner	p. 178
	BetteCorner 35 mm, same shank length	p. 188

Pentagonal shower trays

800 × 800 mm	BetteCaro 35 mm, same shank length	p. 186
900 × 900 mm	BetteFloor Caro	p. 176
	BetteCaro 35 mm, same shank length	p. 186
1000 × 1000 mm	BetteFloor Caro	p. 176
	BetteCaro 35 mm, same shank length	p. 186

Counter top washbasins

300 × 400 mm	BetteArt Counter Top	p. 236
350 × 350 mm	BetteCraft shell	p. 246
450 × 450 mm	BetteCraft shell	p. 246
600 × 400 mm	BetteArt Counter Top	p. 236
800 × 400 mm	BetteArt Counter Top	p. 236

Built-in washbasins

500 × 500 mm	BetteLux Oval Built-In	p. 262
	BetteLux Oval Built-In - 1 drilling	p. 262
600 × 495 mm	BetteAqua Built-In	p. 234
	BetteAqua Built-In - 1 drilling	p. 234
	BetteOne Built-In	p. 266
	BetteOne Built-In - 1 drilling	p. 266
	BetteComodo Built-In	p. 240
	BetteComodo Built-In - 1 drilling	p. 240
	BetteLux Built-In	p. 258
	BetteLux Built-In - 1 drilling	p. 258
800 × 495 mm	BetteAqua Built-In	p. 234
	BetteAqua Built-In - 1 drilling	p. 234
	BetteLoft Built-In	p. 248
	BetteLoft Built-In - 1 drilling	p. 248
	BetteOne Built-In	p. 266
	BetteOne Built-In - 1 drilling	p. 266
	BetteComodo Built-In	p. 240
	BetteComodo Built-In - 1 drilling	p. 240
	BetteLux Built-In	p. 258
	BetteLux Built-In - 1 drilling	p. 258
1400 × 495 mm	BetteAqua Built-In	p. 234
	BetteAqua Built-In - 1 drilling	p. 234
	BetteAqua Built-In - 2 drillings	p. 234

Wall-mounted washbasins

815 × 510 mm	BetteLoft Ornament wall-mounted, 4 rows	p. 256
	BetteLoft Ornament wall-mounted, 4 rows - 1 drilling	p. 256
825 × 525 mm	BetteLoft Ornament wall-mounted, 1 row	p. 254
	BetteLoft Ornament wall-mounted, 1 row - 1 drilling	p. 254

Undermounted washbasins

434 × 416 mm	BetteOne Undermounted	p. 268
574 × 380 mm	BetteComodo Undermounted	p. 242
	BetteComodo Undermounted with overflow	p. 244
587 × 408 mm	BetteOne Undermounted	p. 268
740 × 386 mm	BetteLoft Undermounted	p. 250
	BetteLoft Undermounted washbasin with overflow	p. 252
767 × 400 mm	BetteOne Undermounted	p. 268
774 × 380 mm	BetteComodo Undermounted	p. 242
	BetteComodo Undermounted with overflow	p. 244

Free-standing washbasins

500 × 500 mm	BetteLux Oval Couture	p. 264
	BetteLux Oval Couture - 1 drilling	p. 264
600 × 400 mm	BetteArt Monolith	p. 238
600 × 495 mm	BetteLux Shape	p. 260
	BetteLux Shape - 1 drilling	p. 260
800 × 495 mm	BetteLux Shape	p. 260
	BetteLux Shape - 1 drilling	p. 260
1000 × 495 mm	BetteLux Shape	p. 260
	BetteLux Shape - 1 drilling	p. 260

Baths

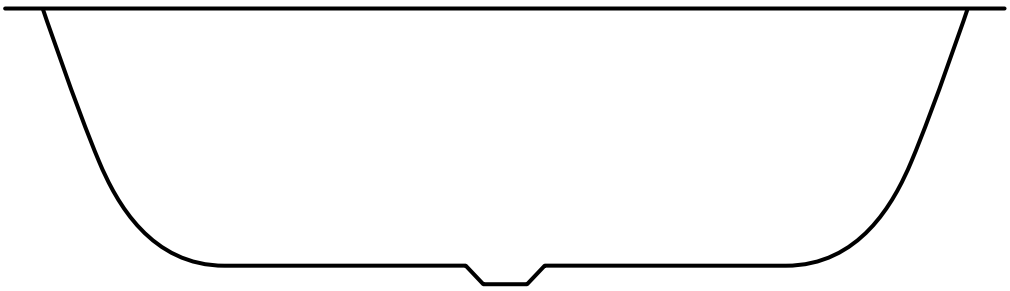

28 BetteArco
30 BetteArt
32 BetteArt I
34 BetteArt IV
36 BetteArt V
38 BetteBambino
40 BetteClassic
42 BetteComodo
44 BetteComodo with side overflow
46 BetteDuett
48 BetteDuo
50 BetteEve
52 BetteEve Oval
54 BetteEve Oval Silhouette
56 BetteForm
58 BetteFree
60 BetteLoft
62 BetteLoft Ornament
64 BetteLuna
66 BetteLux
72 BetteLux I Silhouette Side
74 BetteLux IV Silhouette Side
76 BetteLux V Silhouette Side
80 BetteLux Oval
88 BetteLux Oval I Silhouette
90 BetteLux Oval IV Silhouette
92 BetteLux Oval V Silhouette
82 BetteLux Oval Couture
84 BetteLux Oval Highline
86 BetteLux Oval Silhouette
78 BetteLux Shape
68 BetteLux Silhouette
70 BetteLux Silhouette Side
94 BetteMetric
96 BetteOcean
98 BetteOcean Low-Line
100 BetteOne
102 BetteOne Relax
104 BettePond
106 BettePond Silhouette
110 BettePool I
112 BettePool I Panel
114 BettePool III
116 BettePool III Panel Corner Installation
108 BettePool Oval
118 BetteSelect
122 BetteSelect Duo
120 BetteSelect with side overflow
124 BetteSet
130 BetteSpace L
128 BetteSpace M
126 BetteSpace S
132 BetteStarlet
136 BetteStarlet I
138 BetteStarlet I Silhouette
140 BetteStarlet II
142 BetteStarlet IV
144 BetteStarlet IV Silhouette
146 BetteStarlet V
148 BetteStarlet V Silhouette
150 BetteStarlet Flair Oval
152 BetteStarlet Hexa
154 BetteStarlet Oval
156 BetteStarlet Oval Silhouette
134 BetteStarlet Spirit
158 BetteStep
160 LaBette

BetteArco

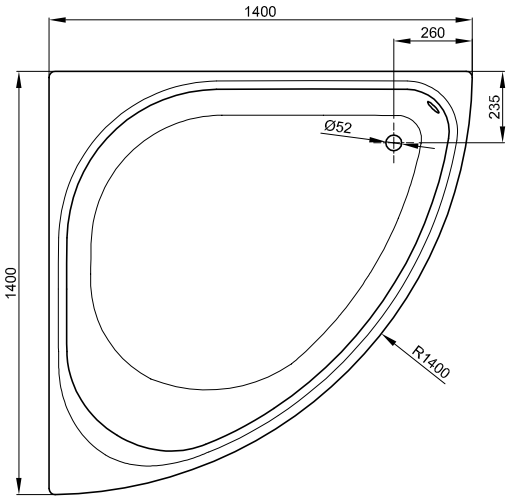

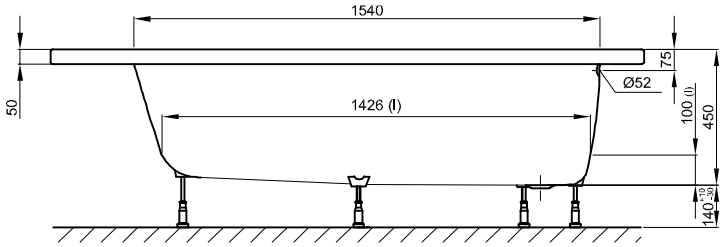

Information

For professional installation we recommend the use of the original bath feet B50-0015.

Scope of delivery

Including noise-reducing pads.

Design: schmiddem design

Dimensions

article no.	dimensions in mm	volume*
6035	1400 × 1400 × 450	267 litres

*bath capacity = volume + 70 litres human water displacement.

Dimensions

PG	article no.	dimensions in mm	weight (net)	White 000 → cover	coloured → cover
CO	6035	1400 × 1400 × 450	58.8 kg	2.371 €	2.549 €

Extras

PG	code	description	see	price
EX	AS	BetteAnti-Slip Sense*	p. 273	190 €
EX	PLUS	BetteGlaze® Plus	p. 274	160 €
EX	HLZ	Tapholes and drilling as per special drawing	p. 276	234 €
IN		Whirlsystems	p. 378	

*Not available with Glaze® Plus. Only available in combination with White (000).

Accessories

PG	article no.	description	see	price
IN	B50-0015	Height-adjustable feet (4 pieces)	p. 343	49 €
IN	B57-0407	Bath divider 3300 × 120 mm	p. 359	33 €
IN	Z0008669	Wall Brackets	p. 360	40 €

Waste- and overflow fittings

PG	article no.	description	see	Chrome 901	White 000
IN	B600-	Waste- and overflow fitting Ø 52 mm, 560 mm	p. 312	150 €	180 €
IN	B604-	Waste, overflow and filling unit Ø 52 mm, 560 mm	p. 316	403 €	477 €
IN	B617-	Waste- and overflow fitting Plus 5, Ø 52 mm, 560 mm	p. 324	234 €	
IN	B618-	Waste, overflow and filling unit Plus 5, Ø 52 mm, 560 mm	p. 329	456 €	

Technical information and prices of additional BetteExtras on page 270. You will find the colours in the cover. Subject to alteration and production tolerance. Prices excluding VAT.

BetteArt

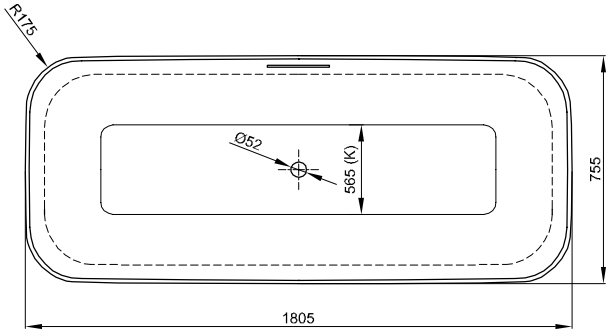

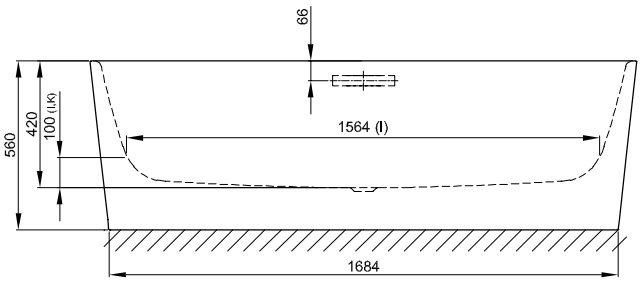

Information

The special waste- and overflow fitting BetteArt is compulsory for installation. The BetteArt waste-and overflow comes prefitted. If ordered with waste and overflow with filling unit the bath comes with prefitted Sanfix tube for water supply. A flexible drain pipe is included in delivery.

Available with matching washbasin BetteArt or BetteArt Monolith. → p. 236

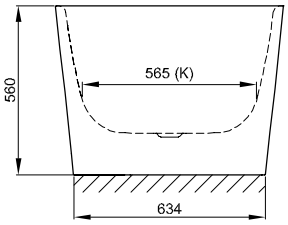

Scope of delivery

Including noise-reducing pads.

Design: Tesseraux + Partner

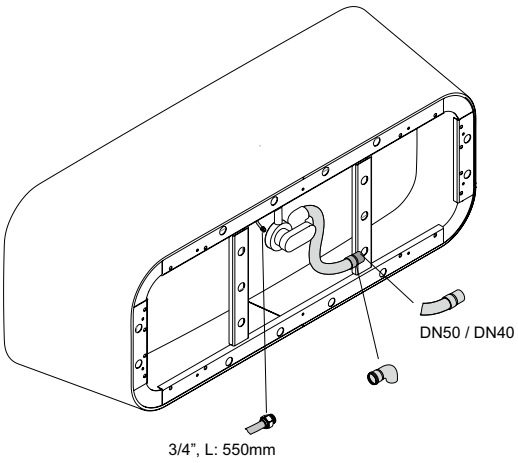

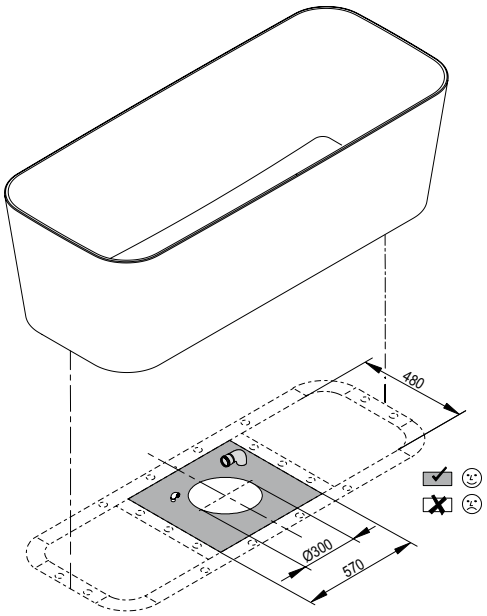

Adequate position to connect the drainage

Dimensions

article no.	dimensions in mm	volume*
3480 CFXXK	1805 × 755 × 420	248 litres

*bath capacity = volume + 70 litres human water displacement.

Dimensions

PG	article no.	dimensions in mm	weight (net)	White 000 → cover	coloured → cover
CO	3480 CFXXK	1805 × 755 × 420	113 kg	6.223 €	6.990 €

Please note the ordering information on page 5.

Extras

PG	code	description	see	price
EX	AS	BetteAnti-Slip Sense*	p. 273	190 €
EX	PLUS	BetteGlaze® Plus	p. 274	160 €

*Not available with Glaze® Plus. Only available in combination with White (000).

Waste- and overflow fittings (required accessories)

PG	article no.	description	see	Chrome 901	White 000
IN	B614-	Waste- and overflow fitting BetteArt	p. 334	646 €	715 €
IN	B615-	Waste, overflow and filling unit Trio BetteArt, 725 mm	p. 335	980 €	1.153 €

Technical information and prices of additional BetteExtras on page 270. You will find the colours in the cover. Subject to alteration and production tolerance. Prices excluding VAT.

BetteArt I

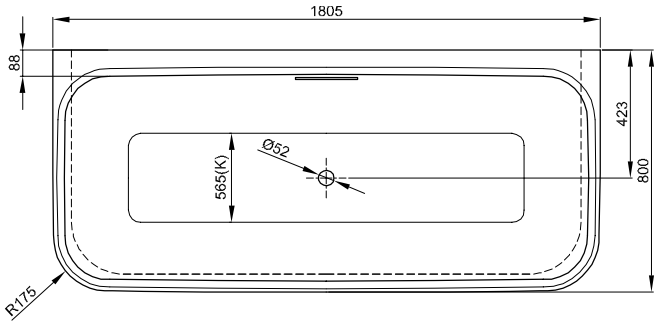

Information

The special waste- and overflow fitting BetteArt is compulsory for installation. The BetteArt waste-and overflow comes prefitted. If ordered with waste and overflow with filling unit the bath comes with prefitted Sanfix tube for water supply. A flexible drain pipe is included in delivery.

Available with matching washbasin BetteArt or BetteArt Monolith. → p. 236

Scope of delivery

Including noise-reducing pads.

Design: Tesseraux + Partner

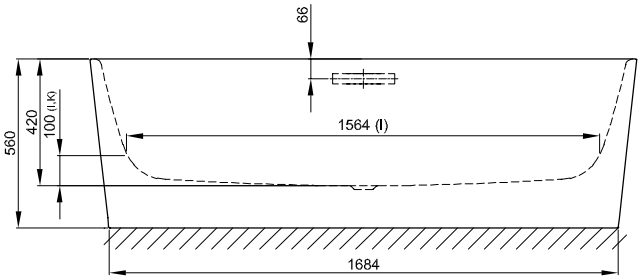

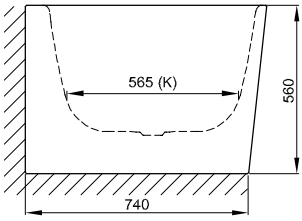

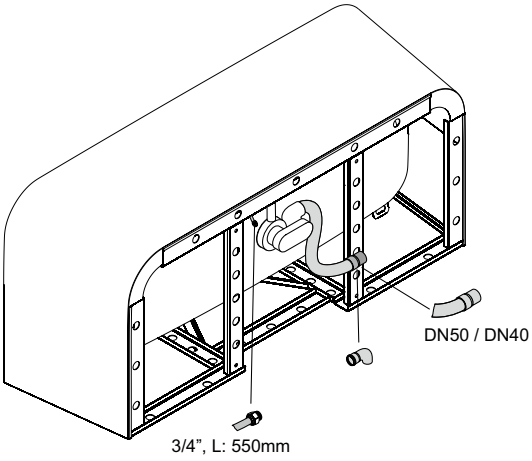

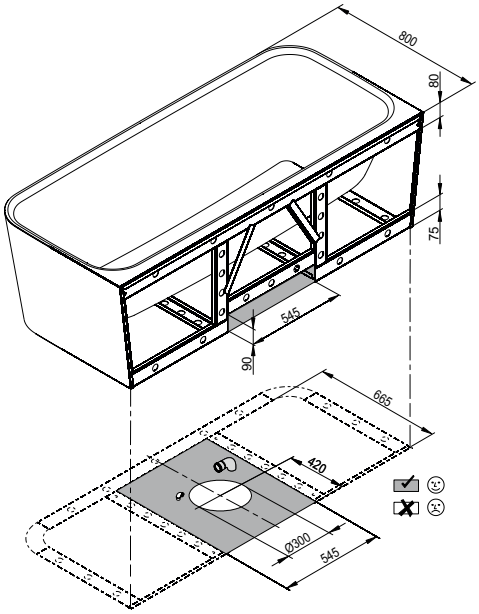

Adequate position to connect the drainage

Dimensions

article no.	dimensions in mm	volume*
3480 CWVHK	1805 × 800 × 420	248 litres

*bath capacity = volume + 70 litres human water displacement.

Dimensions

PG	article no.	dimensions in mm	weight (net)	White 000 → cover	coloured → cover
CO	3480 CWVHK	1805 × 800 × 420	105 kg	5.976 €	6.743 €

Please note the ordering information on page 5.

Extras

PG	code	description	see	price
EX	AS	BetteAnti-Slip Sense*	p. 273	190 €
EX	PLUS	BetteGlaze® Plus	p. 274	160 €

*Not available with Glaze® Plus. Only available in combination with White (000).

Waste- and overflow fittings (required accessories)

PG	article no.	description	see	Chrome 901	White 000
IN	B614-	Waste- and overflow fitting BetteArt	p. 334	646 €	715 €
IN	B615-	Waste, overflow and filling unit Trio BetteArt, 725 mm	p. 335	980 €	1.153 €

Technical information and prices of additional BetteExtras on page 270. You will find the colours in the cover. Subject to alteration and production tolerance. Prices excluding VAT.

BetteArt IV

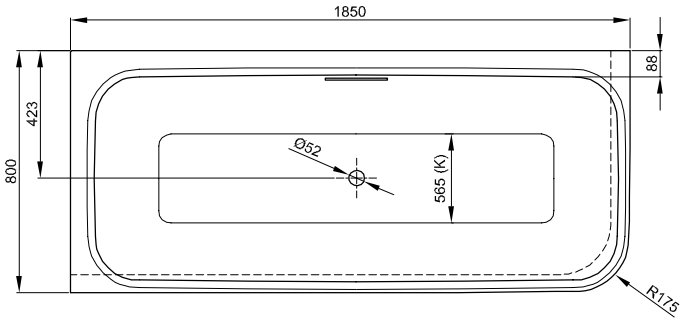

Information

The special waste- and overflow fitting BetteArt is compulsory for installation. The BetteArt waste-and overflow comes prefitted. If ordered with waste and overflow with filling unit the bath comes with prefitted Sanfix tube for water supply. A flexible drain pipe is included in delivery.

Available with matching washbasin BetteArt or BetteArt Monolith. → p. 236

Scope of delivery

Including noise-reducing pads.

Design: Tesseraux + Partner

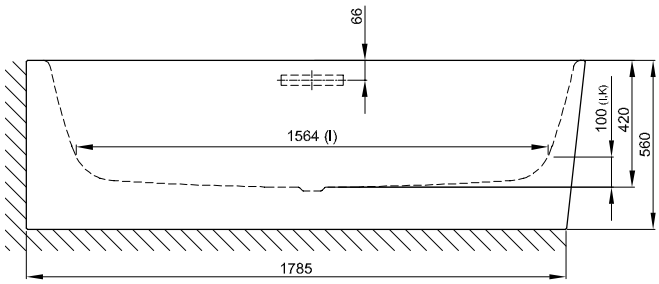

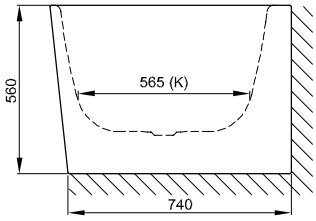

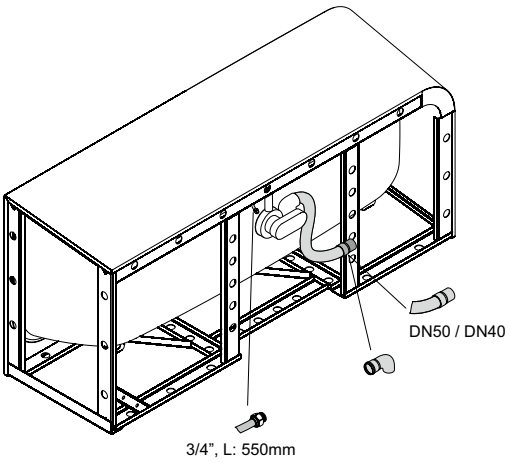

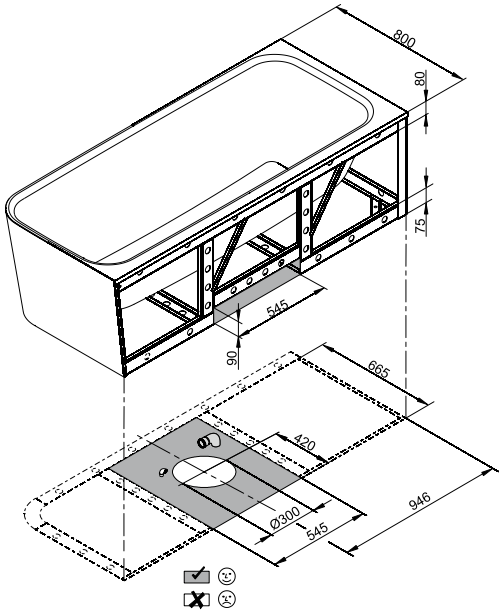

Adequate position to connect the drainage

Dimensions

article no.	dimensions in mm	volume*
3480 CERHK	1850 × 800 × 420	248 litres

*bath capacity = volume + 70 litres human water displacement.

Dimensions

PG	article no.	dimensions in mm	weight (net)	White 000 → cover	coloured → cover
CO	3480 CERHK	1850 × 800 × 420	93 kg	5.976 €	6.743 €

Please note the ordering information on page 5.

Extras

PG	code	description	see	price
EX	AS	BetteAnti-Slip Sense*	p. 273	190 €
EX	PLUS	BetteGlaze® Plus	p. 274	160 €

*Not available with Glaze® Plus. Only available in combination with White (000).

Waste- and overflow fittings (required accessories)

PG	article no.	description	see	Chrome 901	White 000
IN	B614-	Waste- and overflow fitting BetteArt	p. 334	646 €	715 €
IN	B615-	Waste, overflow and filling unit Trio BetteArt, 725 mm	p. 335	980 €	1.153 €

Technical information and prices of additional BetteExtras on page 270. You will find the colours in the cover. Subject to alteration and production tolerance. Prices excluding VAT.

BetteArt V

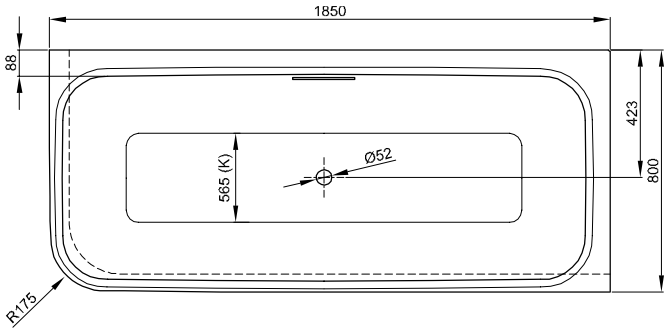

Information

The special waste- and overflow fitting BetteArt is compulsory for installation. The BetteArt waste-and overflow comes prefitted. If ordered with waste and overflow with filling unit the bath comes with prefitted Sanfix tube for water supply. A flexible drain pipe is included in delivery.

Available with matching washbasin BetteArt or BetteArt Monolith. → p. 236

Scope of delivery

Including noise-reducing pads.

Design: Tesseraux + Partner

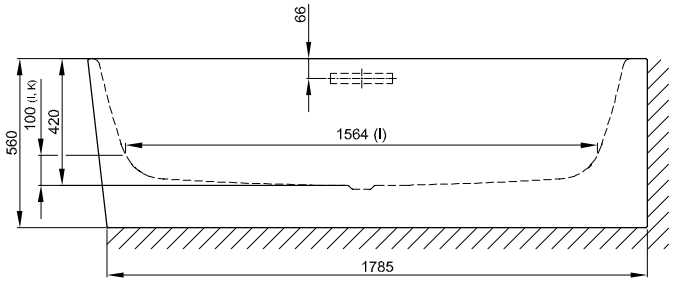

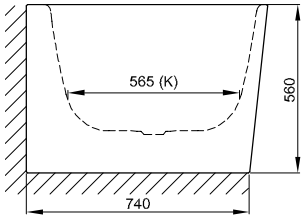

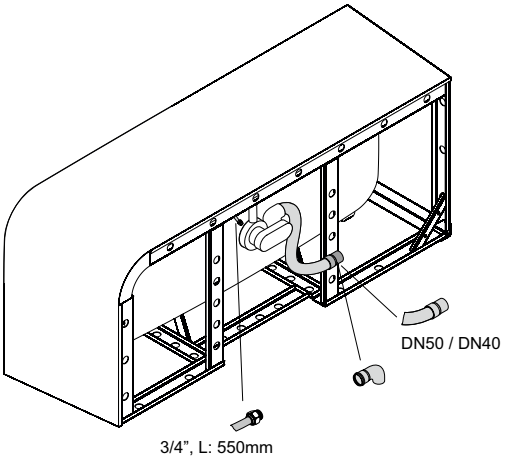

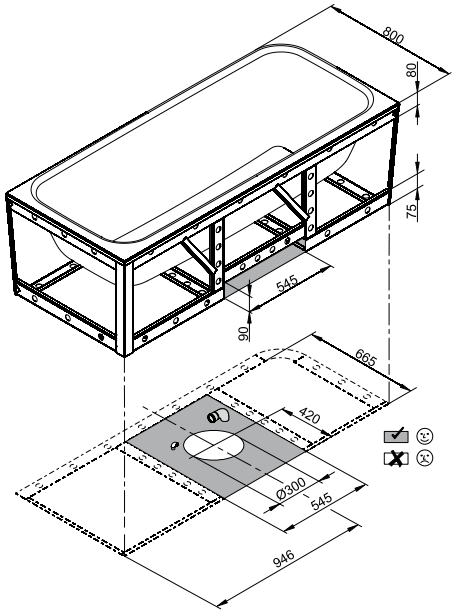

Adequate position to connect the drainage

Dimensions

article no.	dimensions in mm	volume*
3480 CELHK	1850 × 800 × 420	248 litres

*bath capacity = volume + 70 litres human water displacement.

Dimensions

PG	article no.	dimensions in mm	weight (net)	White 000 → cover	coloured → cover
CO	3480 CELHK	1850 × 800 × 420	93 kg	5.976 €	6.743 €

Please note the ordering information on page 5.

Extras

PG	code	description	see	price
EX	AS	BetteAnti-Slip Sense*	p. 273	190 €
EX	PLUS	BetteGlaze® Plus	p. 274	160 €

*Not available with Glaze® Plus. Only available in combination with White (000).

Waste- and overflow fittings (required accessories)

PG	article no.	description	see	Chrome 901	White 000
IN	B614-	Waste- and overflow fitting BetteArt	p. 334	646 €	715 €
IN	B615-	Waste, overflow and filling unit Trio BetteArt, 725 mm	p. 335	980 €	1.153 €

Technical information and prices of additional BetteExtras on page 270. You will find the colours in the cover. Subject to alteration and production tolerance. Prices excluding VAT.

BetteBambino

N° 1: foot end left

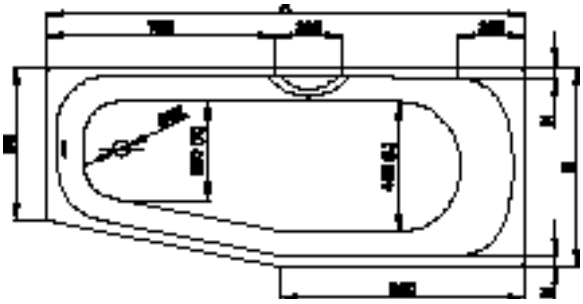

N° 1: foot end left

N° 2: foot end right

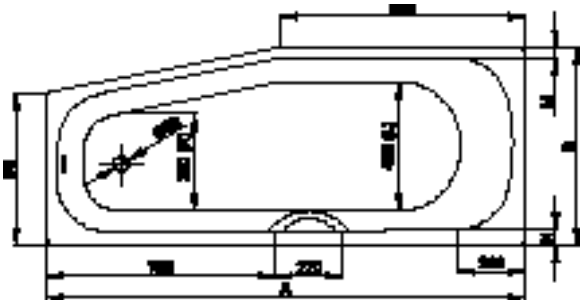

N° 2: foot end right

Information

For professional installation we recommend the use of the original bath feet B23-1500.

If the bath is to be fitted under a panel, please contact us for individual cut-out details.

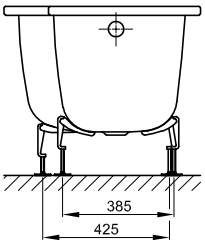

Dimensions

article no.	dimensions in mm	variant	A	B	B2	M	N	volume*
2770	1570 × 650 × 420	№ 1	1570	650	500	50	50	104 litres
2780	1570 × 650 × 420	№ 2	1570	650	500	50	50	104 litres
2570	1570 × 700 × 420	№ 1	1570	700	550	60	90	104 litres
2580	1570 × 700 × 420	№ 2	1570	700	550	60	90	104 litres

*bath capacity = volume + 70 litres human water displacement.

Dimensions

PG	article no.	dimensions in mm	variant	weight (net)	pcs/pallet	White 000 → cover	coloured → cover
BA	2770	1570 × 650 × 420	№ 1	39 kg	10	747 € ☗	925 €
BA	2780	1570 × 650 × 420	№ 2	39 kg	9	747 € ☗	925 €
BA	2570	1570 × 700 × 420	№ 1	41 kg	10	747 € ☗	925 €
BA	2580	1570 × 700 × 420	№ 2	41 kg	9	747 € ☗	925 €

Extras

PG	code	description	see	price
EX	AS	BetteAnti-Slip Sense*	p. 273	190 €
EX	PLUS	BetteGlaze® Plus	p. 274	160 €
EX	HLZ	Tapholes and drilling as per special drawing	p. 276	234 €
EX		Profi Corner	p. 284	from 404 €
EX	AD	Antinoise for baths	p. 275	103 €
IN		Whirlsystems	p. 378	

*Not available with Glaze® Plus. Only available in combination with White (000).

Accessories

PG	article no.	description	see	price
IN	B23-1500	Bath feet universal	p. 342	75 €
IN	B090-901	Grip B090, chrome*	p. 367	178 €
IN	B120-901	Grip B120, chrome*	p. 368	178 €
IN	B57-0372	Sealing System for baths	p. 356	106 €
IN	B57-0407	Bath divider 3300 × 120 mm	p. 359	33 €
IN	Z0008669	Wall Brackets	p. 360	40 €

* The baths need to be ordered with the ending 1GR.

Waste- and overflow fittings

PG	article no.	description	see	Chrome 901	White 000
IN	B600-	Waste- and overflow fitting Ø 52 mm, 560 mm	p. 312	150 €	180 €
IN	B604-	Waste, overflow and filling unit Ø 52 mm, 560 mm	p. 316	403 €	477 €
IN	B617-	Waste- and overflow fitting Plus 5, Ø 52 mm, 560 mm	p. 324	234 €	
IN	B618-	Waste, overflow and filling unit Plus 5, Ø 52 mm, 560 mm	p. 329	456 €	
IN	B629-	Waste- and overflow fitting Simplex Ø 52 mm, 560 mm	p. 336	90 €	

Technical information and prices of additional BetteExtras on page 270. You will find the colours in the cover. Subject to alteration and production tolerance. Prices excluding VAT.

BetteClassic

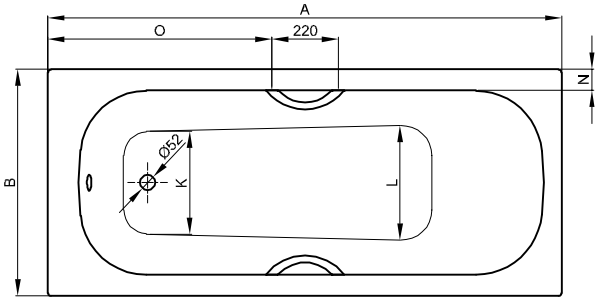

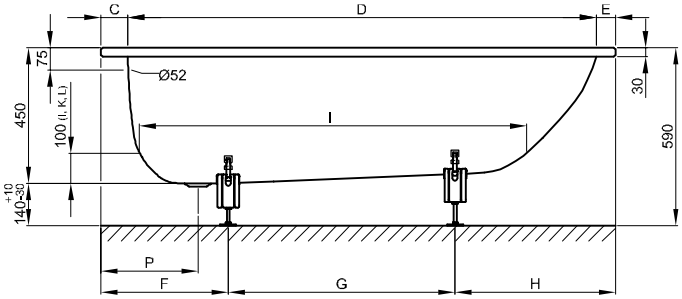

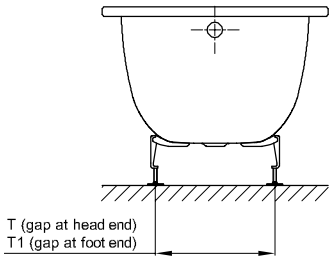

Information

The BetteClassic, 1900 × 800 × 450 mm, article no. 1273, is not available with BetteUpstand or in special size.

For professional installation we recommend the use of the original bath feet B23-1500.

If the bath is to be fitted under a panel, please contact us for individual cut-out details.

Scope of delivery

Including noise-reducing pads.

Dimensions

article no.	dimensions in mm	A	B	C	D	E	F	G	H	I	K	L	N	O	P	T	T1	volume*
1266	1400 × 700 × 450	1400	700	100	1230	70	400	420	580	965	450	475	65	590	320	405	395	92 litres
1268	1500 × 700 × 450	1500	700	100	1330	70	400	520	580	1070	450	475	70	640	320	390	360	108 litres
1267	1600 × 700 × 450	1600	700	100	1430	70	400	620	580	1155	450	470	65	690	320	430	415	125 litres
1269	1600 × 750 × 450	1600	750	100	1430	70	400	620	580	1170	470	495	65	690	320	440	405	136 litres
1265	1650 × 750 × 450	1650	750	120	1430	100	420	620	610	1170	470	495	65	710	340	420	405	136 litres
3108	1700 × 700 × 450	1700	700	100	1530	70	420	700	580	1265	450	475	65	740	320	395	410	140 litres
3109	1700 × 730 × 450	1700	730	100	1530	70	420	700	580	1265	450	475	80	740	320	403	405	140 litres
3110	1700 × 750 × 450	1700	750	90	1555	55	420	690	590	1275	505	525	65	740	320	405	360	162 litres
3111	1700 × 800 × 450	1700	800	90	1555	55	420	690	590	1275	505	525	90	740	320	385	360	162 litres
3112	1750 × 750 × 450	1750	750	120	1555	75	450	690	610	1275	505	525	65	770	350	385	360	162 litres
1271	1800 × 700 × 450	1800	700	100	1635	65	460	730	610	1360	420	450	70	790	320	420	420	163 litres
1272	1800 × 750 × 450	1800	750	100	1635	65	460	730	610	1360	420	450	95	790	320	420	420	163 litres
1270	1800 × 800 × 450	1800	800	100	1635	65	430	790	580	1360	550	570	65	790	320	455	400	197 litres
1273	1900 × 800 × 450	1900	800	100	1730	70	440	860	600	1460	485	510	70	840	320	455	440	197 litres

*bath capacity = volume + 70 litres human water displacement.

Dimensions

PG	article no.	dimensions in mm	weight (net)	pcs/pallet	White 000 → cover	coloured → cover
BA	1266	1400 × 700 × 450	38.6 kg	10	858 €	1.036 €
BA	1268	1500 × 700 × 450	41.2 kg	10	858 €	1.036 €
BA	1267	1600 × 700 × 450	44 kg	10	858 €	1.036 €
BA	1269	1600 × 750 × 450	45.8 kg	10	858 €	1.036 €
BA	1265	1650 × 750 × 450	46.6 kg	10	858 €	1.036 €
BA	3108	1700 × 700 × 450	46.7 kg	10	858 €	1.036 €
BA	3109	1700 × 730 × 450	47.5 kg	10	858 €	1.036 €
BA	3110	1700 × 750 × 450	48.3 kg	12	858 € ☗	1.036 €
BA	3111	1700 × 800 × 450	50.6 kg	10	858 €	1.036 €
BA	3112	1750 × 750 × 450	49.6 kg	10	901 €	1.079 €
BA	1271	1800 × 700 × 450	49 kg	10	901 € ☗	1.079 €
BA	1272	1800 × 750 × 450	52.7 kg	14	901 € ☗	1.079 €
BA	1270	1800 × 800 × 450	53.4 kg	10	944 € ☗	1.122 €
BA	1273	1900 × 800 × 450	55.2 kg	10	1.067 €	1.245 €

Extras

PG	code	description	see	price
EX	AS	BetteAnti-Slip Sense*	p. 273	190 €
EX	PLUS	BetteGlaze® Plus	p. 274	160 €
EX	HLZ	Tapholes and drilling as per special drawing	p. 276	234 €
EX		BetteUpstand	p. 280	from 424 €
EX		Special size	p. 286	404 €
EX		Profi Corner	p. 284	from 404 €
IN		Whirlsystems	p. 378	

*Not available with Glaze® Plus. Only available in combination with White (000).

Accessories

PG	article no.	description	see	price
IN	B23-1500	Bath feet universal	p. 342	75 €
IN	B080-901	Grips B080, chrome*	p. 366	224 €
IN	B122-901	Grips B122, chrome*	p. 368	233 €
IN	B57-0372	Sealing System for baths	p. 356	106 €
IN	B57-0407	Bath divider 3300 × 120 mm	p. 359	33 €
IN	Z0008669	Wall Brackets	p. 360	40 €

* The baths need to be ordered with the ending 2GR.

Waste- and overflow fittings

PG	article no.	description	see	Chrome 901	White 000
IN	B600-	Waste- and overflow fitting Ø 52 mm, 560 mm	p. 312	150 €	180 €
IN	B604-	Waste, overflow and filling unit Ø 52 mm, 560 mm	p. 316	403 €	477 €
IN	B617-	Waste- and overflow fitting Plus 5, Ø 52 mm, 560 mm	p. 324	234 €	
IN	B618-	Waste, overflow and filling unit Plus 5, Ø 52 mm, 560 mm	p. 329	456 €	
IN	B629-	Waste- and overflow fitting Simplex Ø 52 mm, 560 mm	p. 336	90 €	

Technical information and prices of additional BetteExtras on page 270. You will find the colours in the cover. Subject to alteration and production tolerance. Prices excluding VAT.

BetteComodo

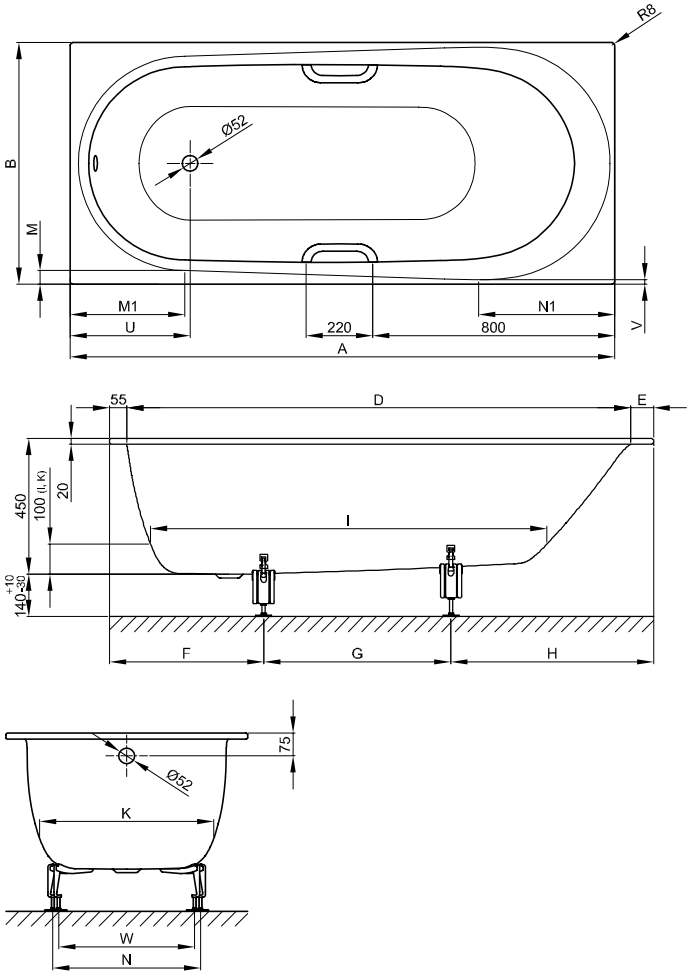

Information

The BetteComodo, 1900 × 900 × 450 mm, article no. 1252, is not available with BetteUpstand or in special size.

For professional installation we recommend the use of the original bath feet B23-1500.

If the bath is to be fitted under a panel, please contact us for individual cut-out details.

Available with matching washbasin BetteComodo. → p. 240

Scope of delivery

Including noise-reducing pads.

Design: Tesseraux + Partner

Dimensions

article no.	dimensions in mm	A	B	D	E	F	G	H	I	K	M	M1	N	N1	U	V	W	volume*
1250	1700 × 750 × 450	1700	750	1580	65	470	580	650	1250	540	43	355	445	420	374	15	445	155 litres
1253	1700 × 800 × 450	1700	800	1580	65	470	580	650	1250	540	70	355	445	420	374	40	445	155 litres
1251	1800 × 800 × 450	1800	800	1670	75	470	660	670	1310	575	45	375	460	450	395	15	495	182 litres
1252	1900 × 900 × 450	1900	900	1770	75	520	660	720	1380	650	50	410	530	520	432	15	585	228 litres

*bath capacity = volume + 70 litres human water displacement.

Dimensions

PG	article no.	dimensions in mm	weight (net)	pcs/pallet	White 000 → cover	coloured → cover
CO	1250	1700 × 750 × 450	45 kg	7	842 € ☗	1.020 €
CO	1253	1700 × 800 × 450	50 kg	7	842 € ☗	1.020 €
CO	1251	1800 × 800 × 450	52.5 kg	7	926 € ☗	1.104 €
CO	1252	1900 × 900 × 450	52.8 kg	7	1.163 €	1.341 €

Extras

PG	code	description	see	price
EX	AS	BetteAnti-Slip Sense*	p. 273	190 €
EX	PLUS	BetteGlaze® Plus	p. 274	160 €
EX	HLZ	Tapholes and drilling as per special drawing	p. 276	234 €
EX		BetteUpstand	p. 280	from 424 €
EX		Special size	p. 286	404 €
EX		Profi Corner	p. 284	from 404 €
IN		Whirlsystems	p. 378	

*Not available with Glaze® Plus. Only available in combination with White (000).

Accessories

PG	article no.	description	see	price
IN	B23-1500	Bath feet universal	p. 342	75 €
IN	B080-901	Grips B080, chrome*	p. 366	224 €
IN	B122-901	Grips B122, chrome*	p. 368	233 €
IN	B57-0372	Sealing System for baths	p. 356	106 €
IN	B57-0407	Bath divider 3300 × 120 mm	p. 359	33 €
IN	Z0008669	Wall Brackets	p. 360	40 €

* The baths need to be ordered with the ending 2GR.

Waste- and overflow fittings

PG	article no.	description	see	Chrome 901	White 000
IN	B602-	Waste- and overflow fitting Ø 52 mm, 725 mm	p. 314	154 €	177 €
IN	B606-	Waste, overflow and filling unit Ø 52 mm, 725 mm	p. 318	423 €	514 €
IN	B619-	Waste- and overflow fitting Plus 5, Ø 52 mm, 1070 mm	p. 325	267 €	
IN	B620-	Waste, overflow and filling unit Plus 5, Ø 52 mm, 1070 mm	p. 330	529 €	

Technical information and prices of additional BetteExtras on page 270. You will find the colours in the cover. Subject to alteration and production tolerance. Prices excluding VAT.

BetteComodo with side overflow

N° 1: foot end right, overflow front

N° 2: foot end right, overflow rear

Information

The BetteComodo with side overflow, 1900 x 900 x 450 mm, article no. 1622 and 1642, are not available with BetteUpstand or in special size.

For professional installation we recommend the use of the original bath feet B23-1500.

Available with matching washbasin BetteComodo. → p. 240

Scope of delivery

Including noise-reducing pads.

Design: Tesseraux + Partner

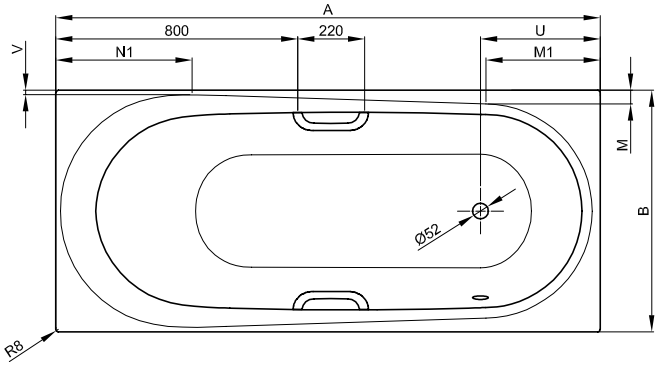

N° 1: foot end right, overflow front

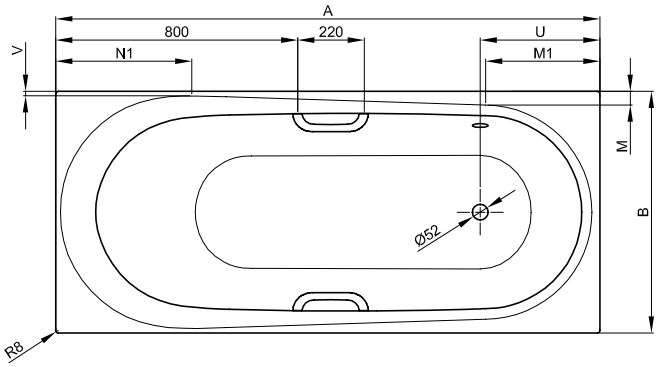

N° 2: foot end right, overflow rear

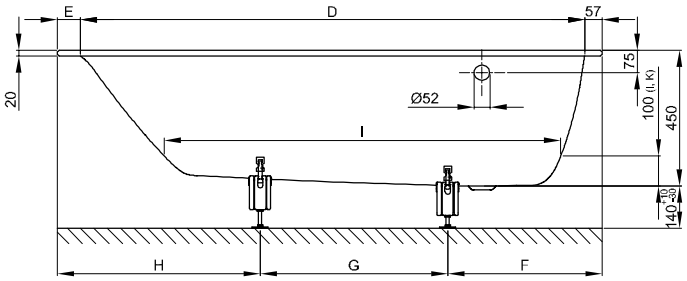

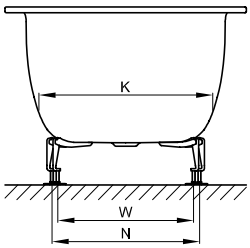

Dimensions

article no.	dimensions in mm	variant	A	B	D	E	F	G	H	I	K	M	M1	N	N1	U	V	W	volume*
1620	1700 × 750 × 450	№ 1	1700	750	1580	65	470	650	540	1250	540	43	355	445	420	374	15	445	155 litres
1640	1700 × 750 × 450	№ 2	1700	750	1580	65	470	580	650	1250	540	43	355	445	420	374	15	445	155 litres
1623	1700 × 800 × 450	№ 1	1700	800	1580	65	470	580	650	1250	540	70	355	445	420	374	40	445	155 litres
1643	1700 × 800 × 450	№ 2	1700	800	1580	65	470	580	650	1250	540	70	355	445	420	374	40	445	155 litres
1621	1800 × 800 × 450	№ 1	1800	800	1670	75	470	660	670	1310	575	45	375	460	450	395	15	495	182 litres
1641	1800 × 800 × 450	№ 2	1800	800	1670	75	470	660	670	1310	575	45	375	460	450	395	15	495	182 litres
1622	1900 × 900 × 450	№ 1	1900	900	1770	75	520	660	720	1380	650	50	410	530	520	432	15	585	228 litres
1642	1900 × 900 × 450	№ 2	1900	900	1770	75	520	660	720	1380	650	50	410	530	520	432	15	585	228 litres

*bath capacity = volume + 70 litres human water displacement.

Dimensions

PG	article no.	dimensions in mm	variant	weight (net)	pcs/pallet	White 000 → cover	coloured → cover
CO	1620	1700 × 750 × 450	№ 1	45 kg	7	842 €	1.020 €
CO	1640	1700 × 750 × 450	№ 2	45 kg	7	842 €	1.020 €
CO	1623	1700 × 800 × 450	№ 1	50 kg	7	842 €	1.020 €
CO	1643	1700 × 800 × 450	№ 2	50 kg	7	842 €	1.020 €
CO	1621	1800 × 800 × 450	№ 1	52.5 kg	7	926 € ☗	1.104 €
CO	1641	1800 × 800 × 450	№ 2	52.5 kg	7	926 € ☗	1.104 €
CO	1622	1900 × 900 × 450	№ 1	52.8 kg	7	1.163 €	1.341 €
CO	1642	1900 × 900 × 450	№ 2	52.8 kg	7	1.163 €	1.341 €

Extras

PG	code	description	see	price
EX	AS	BetteAnti-Slip Sense*	p. 273	190 €
EX	PLUS	BetteGlaze® Plus	p. 274	160 €
EX	HLZ	Tapholes and drilling as per special drawing	p. 276	234 €
EX		BetteUpstand	p. 280	from 424 €
EX		Special size	p. 286	404 €
EX		Profi Corner	p. 284	from 404 €
IN		Whirlsystems	p. 378	

*Not available with Glaze® Plus. Only available in combination with White (000).

Accessories

PG	article no.	description	see	price
IN	B23-1500	Bath feet universal	p. 342	75 €
IN	B080-901	Grips B080, chrome*	p. 366	224 €
IN	B122-901	Grips B122, chrome*	p. 368	233 €
IN	B57-0372	Sealing System for baths	p. 356	106 €
IN	B57-0407	Bath divider 3300 × 120 mm	p. 359	33 €
IN	Z0008669	Wall Brackets	p. 360	40 €

* The baths need to be ordered with the ending 2GR.

Waste- and overflow fittings

PG	article no.	description	see	Chrome 901	White 000
IN	B602-	Waste- and overflow fitting Ø 52 mm, 725 mm	p. 314	154 €	177 €
IN	B606-	Waste, overflow and filling unit Ø 52 mm, 725 mm	p. 318	423 €	514 €
IN	B619-	Waste- and overflow fitting Plus 5, Ø 52 mm, 1070 mm	p. 325	267 €	
IN	B620-	Waste, overflow and filling unit Plus 5, Ø 52 mm, 1070 mm	p. 330	529 €	

Technical information and prices of additional BetteExtras on page 270. You will find the colours in the cover. Subject to alteration and production tolerance. Prices excluding VAT.

BetteDuett

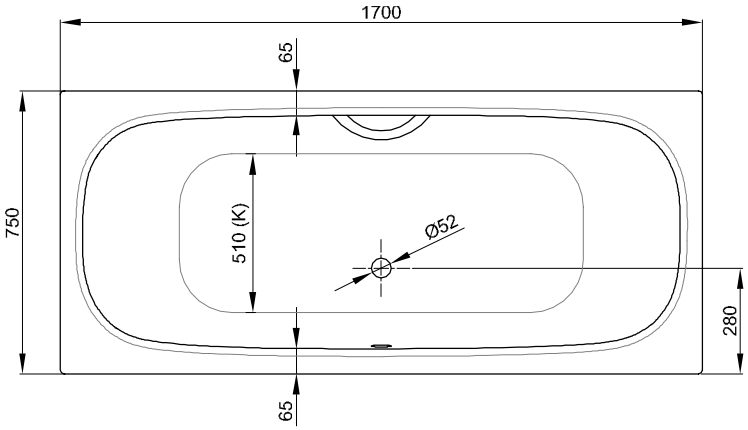

1700 × 750 mm, article no. 3020

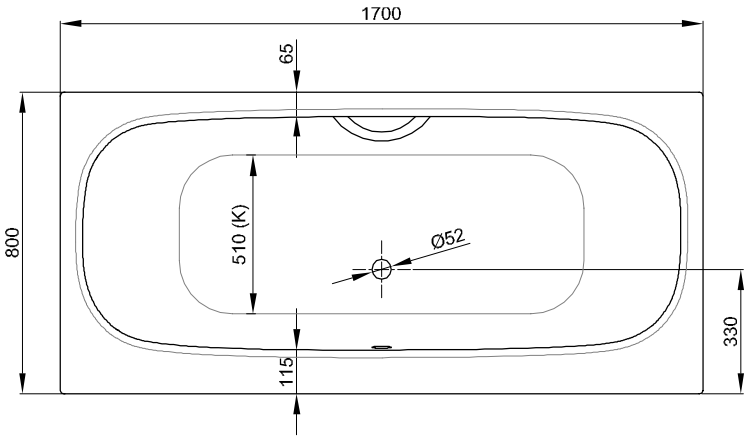

1700 × 800 mm, asymmetrical rim, article no. 3100

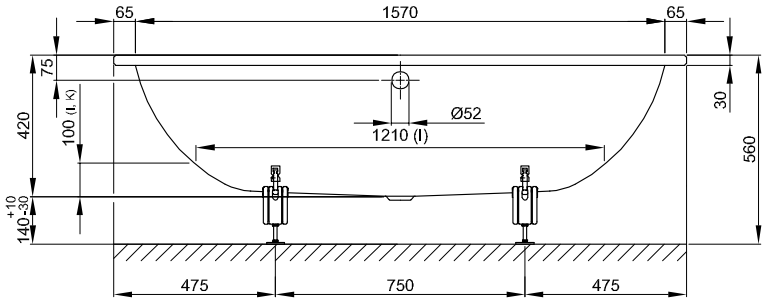

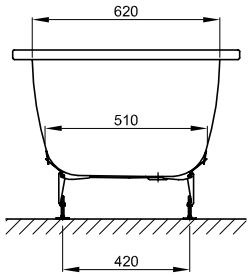

Information

The BetteDuett, article no. 3100: The rim on the overflowside is 50 mm larger, the internal shape is the same as BetteDuett article no. 3020.

For professional installation we recommend the use of the original bath feet B23-1500.

If the bath is to be fitted under a panel, please contact us for individual cut-out details.

Scope of delivery

Including noise-reducing pads.

Dimensions

article no.	dimensions in mm	volume*
3020	1700 × 750 × 420	128 litres
3100	1700 × 800 × 420	128 litres

*bath capacity = volume + 70 litres human water displacement.

Dimensions

PG	article no.	dimensions in mm	weight (net)	pcs/pallet	White 000 → cover	coloured → cover
CO	3020	1700 × 750 × 420	45 kg	10	976 €	1.154 €
CO	3100	1700 × 800 × 420	47.3 kg	10	976 €	1.154 €

Extras

PG	code	description	see	price
EX	AS	BetteAnti-Slip Sense*	p. 273	190 €
EX	PLUS	BetteGlaze® Plus	p. 274	160 €
EX	HLZ	Tapholes and drilling as per special drawing	p. 276	234 €
EX		BetteUpstand	p. 280	from 424 €
EX		Special size	p. 286	404 €
EX		Profi Corner	p. 284	from 404 €
IN		Whirlsystems	p. 378	

*Not available with Glaze® Plus. Only available in combination with White (000).

Accessories

PG	article no.	description	see	price
IN	B23-1500	Bath feet universal	p. 342	75 €
IN	B090-901	Grip B090, chrome*	p. 367	178 €
IN	B120-901	Grip B120, chrome*	p. 368	178 €
IN	B57-0372	Sealing System for baths	p. 356	106 €
IN	B57-0407	Bath divider 3300 × 120 mm	p. 359	33 €
IN	Z0008669	Wall Brackets	p. 360	40 €

* The baths need to be ordered with the ending 1GR.

Waste- and overflow fittings

PG	article no.	description	see	Chrome 901	White 000
IN	B600-	Waste- and overflow fitting Ø 52 mm, 560 mm	p. 312	150 €	180 €
IN	B604-	Waste, overflow and filling unit Ø 52 mm, 560 mm	p. 316	403 €	477 €
IN	B617-	Waste- and overflow fitting Plus 5, Ø 52 mm, 560 mm	p. 324	234 €	
IN	B618-	Waste, overflow and filling unit Plus 5, Ø 52 mm, 560 mm	p. 329	456 €	

Technical information and prices of additional BetteExtras on page 270. You will find the colours in the cover. Subject to alteration and production tolerance. Prices excluding VAT.

BetteDuo

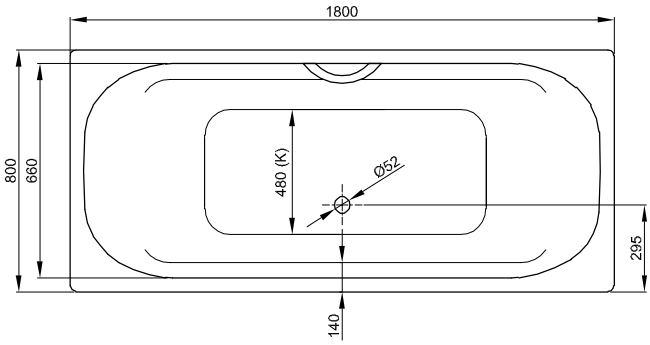

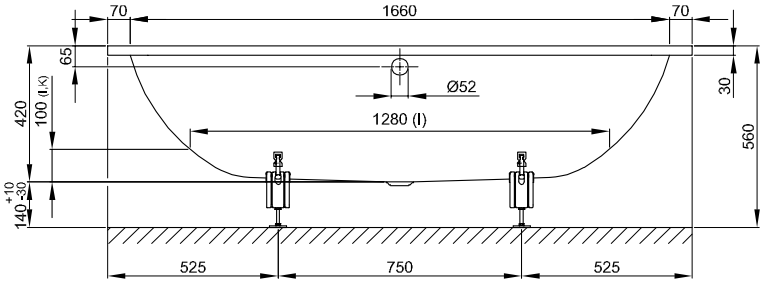

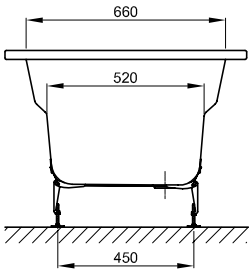

Information

If an overflow filling waste is being used, water may hit the internal ledge.

For professional installation we recommend the use of the original bath feet B23-1500.

If the bath is to be fitted under a panel, please contact us for individual cut-out details.

Scope of delivery

Including noise-reducing pads.

Dimensions

article no.	dimensions in mm	volume*
3820	1800 × 800 × 420	143 litres

*bath capacity = volume + 70 litres human water displacement.

Dimensions

PG	article no.	dimensions in mm	weight (net)	pcs/pallet	White 000 → cover	coloured → cover
CO	3820	1800 × 800 × 420	50.1 kg	12	1.073 € ☗	1.251 €

Extras

PG	code	description	see	price
EX	AS	BetteAnti-Slip Sense*	p. 273	190 €
EX	PLUS	BetteGlaze® Plus	p. 274	160 €
EX	HLZ	Tapholes and drilling as per special drawing	p. 276	234 €
EX		BetteUpstand	p. 280	from 424 €
EX		Special size	p. 286	404 €
EX		Profi Corner	p. 284	from 404 €
IN		Whirlsystems	p. 378	

*Not available with Glaze® Plus. Only available in combination with White (000).

Accessories

PG	article no.	description	see	price
IN	B23-1500	Bath feet universal	p. 342	75 €
IN	B090-901	Grip B090, chrome*	p. 367	178 €
IN	B120-901	Grip B120, chrome*	p. 368	178 €
IN	B57-0372	Sealing System for baths	p. 356	106 €
IN	B57-0407	Bath divider 3300 × 120 mm	p. 359	33 €
IN	Z0008669	Wall Brackets	p. 360	40 €

* The baths need to be ordered with the ending 1GR.

Waste- and overflow fittings

PG	article no.	description	see	Chrome 901	White 000
IN	B600-	Waste- and overflow fitting Ø 52 mm, 560 mm	p. 312	150 €	180 €
IN	B617-	Waste- and overflow fitting Plus 5, Ø 52 mm, 560 mm	p. 324	234 €	

Technical information and prices of additional BetteExtras on page 270. You will find the colours in the cover. Subject to alteration and production tolerance. Prices excluding VAT.

BetteEve

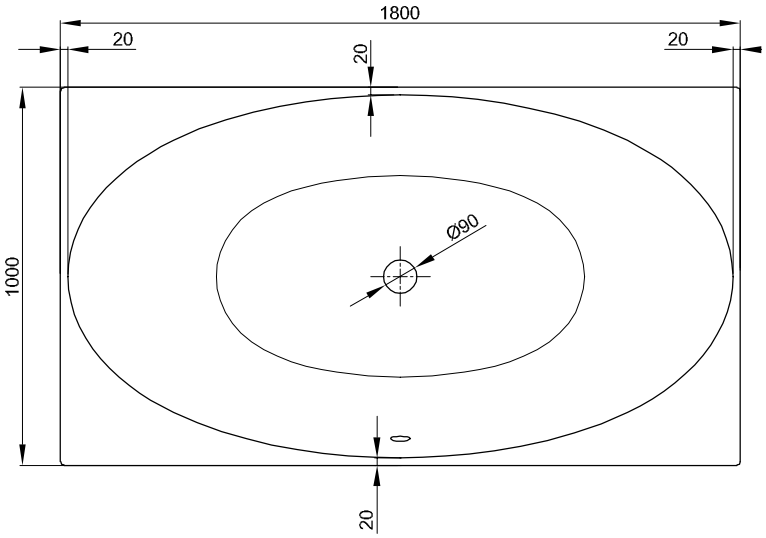

Information

For professional installation we recommend the use of the original bath feet B23-1525.

Scope of delivery

Including noise-reducing pads.

Design: Tesseraux + Partner

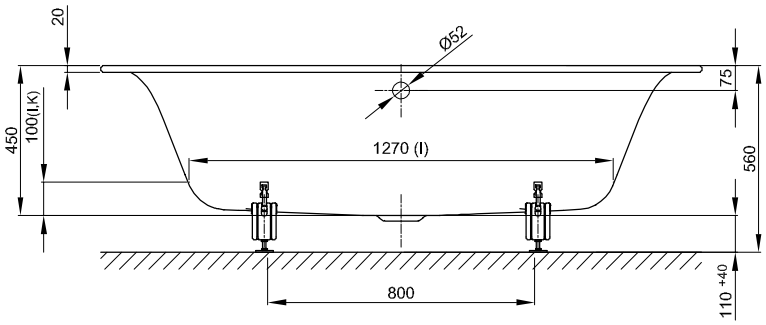

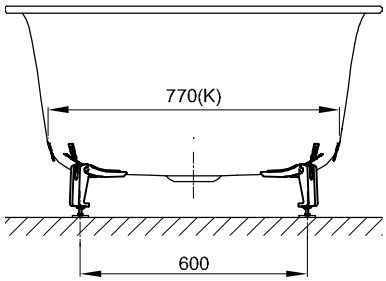

Dimensions

article no.	dimensions in mm	volume*
6042	1800 × 1000 × 450	215 litres

*bath capacity = volume + 70 litres human water displacement.

Dimensions

PG	article no.	dimensions in mm	weight (net)	pcs/pallet	White 000 → cover	coloured → cover
CO	6042	1800 × 1000 × 450	54 kg	9	1.325 €	1.503 €

Extras

PG	code	description	see	price
EX	AS	BetteAnti-Slip Sense*	p. 273	190 €
EX	PLUS	BetteGlaze® Plus	p. 274	160 €
EX		BetteUpstand	p. 280	from 424 €
EX		Profi Corner	p. 284	from 404 €
IN		Whirlsystems	p. 378	

*Not available with Glaze® Plus. Only available in combination with White (000).

Accessories

PG	article no.	description	see	price
IN	B23-1525	Bath feet, oval	p. 342	88 €
IN	B57-0372	Sealing System for baths	p. 356	106 €
IN	B57-0407	Bath divider 3300 × 120 mm	p. 359	33 €
IN	Z0008669	Wall Brackets	p. 360	40 €

Waste- and overflow fittings

PG	article no.	description	see	Chrome 901	White 000
IN	B608-	Waste- and overflow fitting Ø 90 mm, 725 mm	p. 320	232 €	245 €
IN	B611-	Waste, overflow and filling unit Ø 90 mm, 725 mm	p. 322	535 €	566 €
IN	B621-	Waste- and overflow fitting Plus 5, Ø 90 mm, 1070 mm	p. 326	287 €	
IN	B622-	Waste, overflow and filling unit Plus 5, Ø 90 mm, 1070 mm	p. 331	655 €	

Technical information and prices of additional BetteExtras on page 270. You will find the colours in the cover. Subject to alteration and production tolerance. Prices excluding VAT.

BetteEve Oval

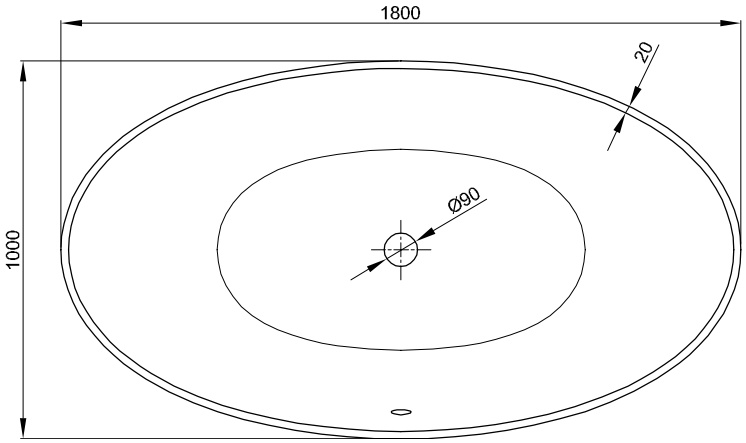

Information

For professional installation we recommend the use of the original bath feet B23-1525.

Scope of delivery

Including noise-reducing pads.

Design: Tesseraux + Partner

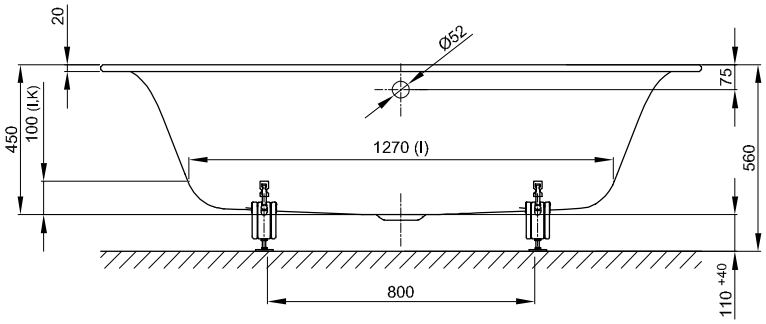

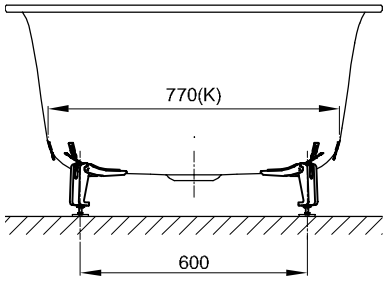

Dimensions

article no.	dimensions in mm	volume*
6043	1800 × 1000 × 450	215 litres

*bath capacity = volume + 70 litres human water displacement.

Dimensions

PG	article no.	dimensions in mm	weight (net)	White 000 → cover	coloured → cover
CO	6043	1800 × 1000 × 450	47 kg	2.121 €	2.299 €

Extras

PG	code	description	see	price
EX	AS	BetteAnti-Slip Sense*	p. 273	190 €
EX	PLUS	BetteGlaze® Plus	p. 274	160 €
IN		Whirlsystems	p. 378	

*Not available with Glaze® Plus. Only available in combination with White (000).

Accessories

PG	article no.	description	see	price
IN	B23-1525	Bath feet, oval	p. 342	88 €
IN	B57-0407	Bath divider 3300 × 120 mm	p. 359	33 €

Waste- and overflow fittings

PG	article no.	description	see	Chrome 901	White 000
IN	B608-	Waste- and overflow fitting Ø 90 mm, 725 mm	p. 320	232 €	245 €
IN	B611-	Waste, overflow and filling unit Ø 90 mm, 725 mm	p. 322	535 €	566 €
IN	B621-	Waste- and overflow fitting Plus 5, Ø 90 mm, 1070 mm	p. 326	287 €	
IN	B622-	Waste, overflow and filling unit Plus 5, Ø 90 mm, 1070 mm	p. 331	655 €	

Technical information and prices of additional BetteExtras on page 270. You will find the colours in the cover. Subject to alteration and production tolerance. Prices excluding VAT.

BetteEve Oval Silhouette

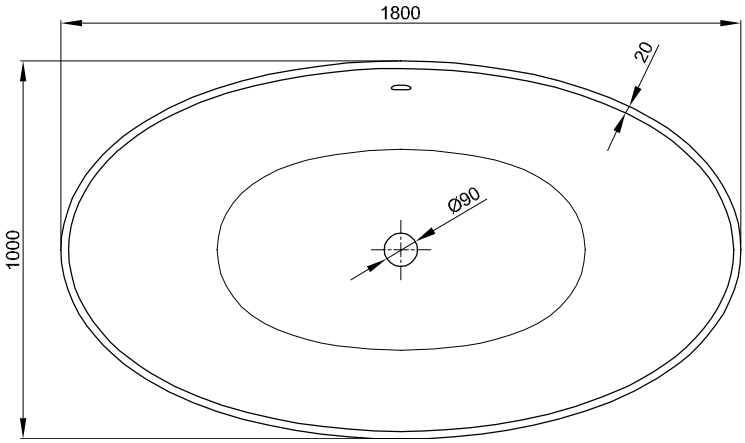

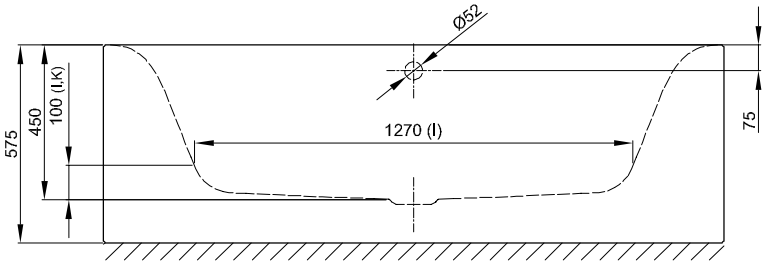

Information

If this bath is ordered with waste fitting this will come prefitted. If ordered with Trio waste the bath comes with prefitted Sanfix tube for water supply. A flexible drain pipe is generally included in delivery.

If combined with BetteWhirlsystems it is necessary to provide an adequate air supply under the bath.

Scope of delivery

Including noise-reducing pads.

Design: Tesseraux + Partner

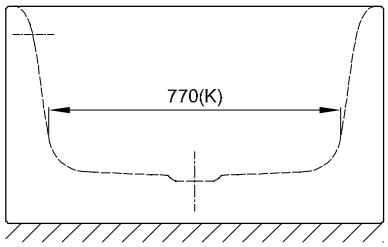

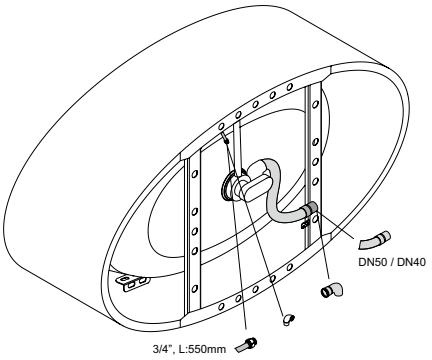

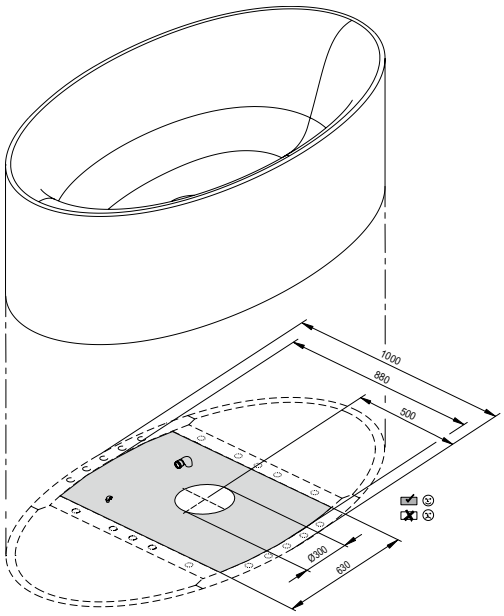

Adequate position to connect the drainage

Dimensions

article no.	dimensions in mm	volume*
6043 CFXXS	1800 × 1000 × 450	215 litres

*bath capacity = volume + 70 litres human water displacement.

Dimensions

PG	article no.	dimensions in mm	weight (net)	White 000 → cover	coloured → cover	Bicolour → cover
CO	6043 CFXXS	1800 × 1000 × 450	95 kg	5.257 €	6.024 €	7.499 €

Please note the ordering information on page 5.

Extras

PG	code	description	see	price
EX	AS	BetteAnti-Slip Sense*	p. 273	190 €
EX	PLUS	BetteGlaze® Plus	p. 274	160 €
IN		Whirlsystems	p. 378	

*Not available with Glaze® Plus. Only available in combination with White (000).

Waste- and overflow fittings

PG	article no.	description	see	Chrome 901	White 000
IN	B609-	Waste- and overflow fitting Silhouette Ø 90 mm, 725 mm	p. 321	311 €	341 €
IN	B612-	Waste, overflow and filling unit Silhouette Ø 90 mm, 725 mm	p. 323	762 €	807 €
IN	B627-	Waste- and overflow fitting Plus 5 Silhouette Ø 90 mm, 1070 mm	p. 328	383 €	
IN	B628-	Waste, overflow and filling unit Plus 5 Silhouette, Ø 90 mm, 1070 mm	p. 333	940 €	

Technical information and prices of additional BetteExtras on page 270. You will find the colours in the cover. Subject to alteration and production tolerance. Prices excluding VAT.

BetteForm

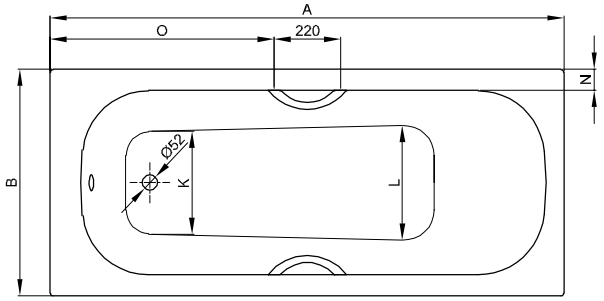

Information

The BetteForm, 1900 × 800 × 420 mm, article no. 2951, is not available with BetteUpstand or in special size.

For professional installation we recommend the use of the original bath feet B23-1500.

If the bath is to be fitted under a panel, please contact us for individual cut-out details.

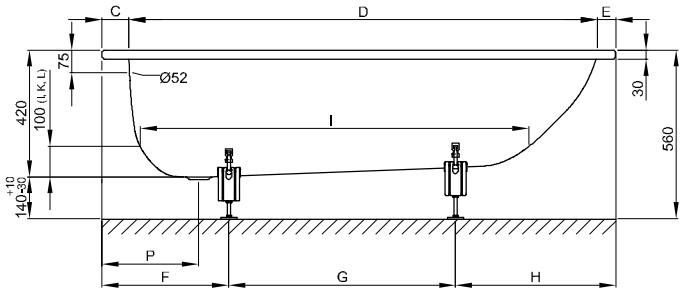

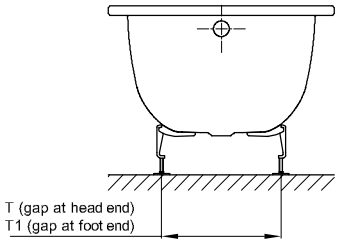

Dimensions

article no.	dimensions in mm	A	B	C	D	E	F	G	H	I	K	L	N	O	P	T	T1	volume*
2940	1400 × 700 × 420	1400	700	100	1230	70	400	420	580	965	450	475	65	590	320	405	395	74 litres
2941	1500 × 700 × 420	1500	700	100	1330	70	400	520	580	1070	450	475	65	640	320	390	360	89 litres
2942	1600 × 700 × 420	1600	700	100	1430	70	400	620	580	1155	450	475	65	690	320	430	415	103 litres
2943	1600 × 750 × 420	1600	750	100	1430	70	400	620	580	1170	470	498	65	690	320	440	405	113 litres
2944	1650 × 750 × 420	1650	750	120	1430	100	420	620	610	1170	470	498	65	710	340	420	405	113 litres
2945	1700 × 700 × 420	1700	700	100	1530	70	420	700	580	1265	450	475	65	740	320	395	410	118 litres
2946	1700 × 730 × 420	1700	730	100	1530	70	420	700	580	1265	450	475	80	740	320	403	405	118 litres
2947	1700 × 750 × 420	1700	750	90	1555	55	420	690	590	1280	505	525	65	740	320	405	360	140 litres
2948	1700 × 800 × 420	1700	800	90	1555	55	420	690	590	1280	505	525	90	740	320	385	360	140 litres
2949	1750 × 750 × 420	1750	750	120	1555	75	450	690	610	1280	505	525	65	770	350	385	360	140 litres
2950	1800 × 800 × 420	1800	800	100	1635	65	430	790	580	1360	555	570	65	790	320	455	400	170 litres
2951	1900 × 800 × 420	1900	800	100	1730	70	440	860	600	1460	485	510	70	840	320	455	440	167 litres

*bath capacity = volume + 70 litres human water displacement.

Dimensions

PG	article no.	dimensions in mm	weight (net)	pcs/pallet	White 000 → cover	coloured → cover
BA	2940	1400 × 700 × 420	37 kg	12	623 € ☗	801 €
BA	2941	1500 × 700 × 420	39.6 kg	12	623 € ☗	801 €
BA	2942	1600 × 700 × 420	42.3 kg	12	623 € ☗	801 €
BA	2943	1600 × 750 × 420	44.1 kg	12	623 € ☗	801 €
BA	2944	1650 × 750 × 420	44.9 kg	12	623 € ☗	801 €
BA	2945	1700 × 700 × 420	44.9 kg	12	623 € ☗	801 €
BA	2946	1700 × 730 × 420	45.8 kg	12	623 € ☗	801 €
BA	2947	1700 × 750 × 420	44 kg	12	623 € ☗	801 €
BA	2948	1700 × 800 × 420	48.8 kg	12	623 € ☗	801 €
BA	2949	1750 × 750 × 420	47.9 kg	12	654 € ☗	832 €
BA	2950	1800 × 800 × 420	51.6 kg	12	651 € ☗	829 €
BA	2951	1900 × 800 × 420	53 kg	12	774 € ☗	952 €

Extras

PG	code	description	see	price
EX	AS	BetteAnti-Slip Sense*	p. 273	190 €
EX	PLUS	BetteGlaze® Plus	p. 274	160 €
EX	HLZ	Tapholes and drilling as per special drawing	p. 276	234 €
EX		BetteUpstand	p. 280	from 424 €
EX		Special size	p. 286	404 €
EX		Profi Corner	p. 284	from 404 €
EX	AD	Antinoise for baths	p. 275	103 €
IN		Whirlsystems	p. 378	

*Not available with Glaze® Plus. Only available in combination with White (000).

Accessories

PG	article no.	description	see	price
IN	B23-1500	Bath feet universal	p. 342	75 €
IN	B080-901	Grips B080, chrome*	p. 366	224 €
IN	B122-901	Grips B122, chrome*	p. 368	233 €
IN	B57-0372	Sealing System for baths	p. 356	106 €
IN	B57-0407	Bath divider 3300 × 120 mm	p. 359	33 €
IN	Z0008669	Wall Brackets	p. 360	40 €

* The baths need to be ordered with the ending 2GR.

Waste- and overflow fittings

PG	article no.	description	see	Chrome 901	White 000
IN	B600-	Waste- and overflow fitting Ø 52 mm, 560 mm	p. 312	150 €	180 €
IN	B604-	Waste, overflow and filling unit Ø 52 mm, 560 mm	p. 316	403 €	477 €
IN	B617-	Waste- and overflow fitting Plus 5, Ø 52 mm, 560 mm	p. 324	234 €	
IN	B618-	Waste, overflow and filling unit Plus 5, Ø 52 mm, 560 mm	p. 329	456 €	
IN	B629-	Waste- and overflow fitting Simplex Ø 52 mm, 560 mm	p. 336	90 €	

Technical information and prices of additional BetteExtras on page 270. You will find the colours in the cover. Subject to alteration and production tolerance. Prices excluding VAT.

BetteFree

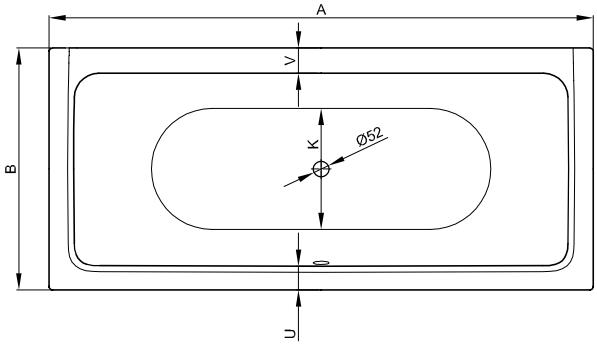

Information

Tapholes can be placed on the overflow rim and on both short side rims.

For professional installation we recommend the use of the original bath feet B23-1500.

Scope of delivery

Including noise-reducing pads.

Design: schmiddem design

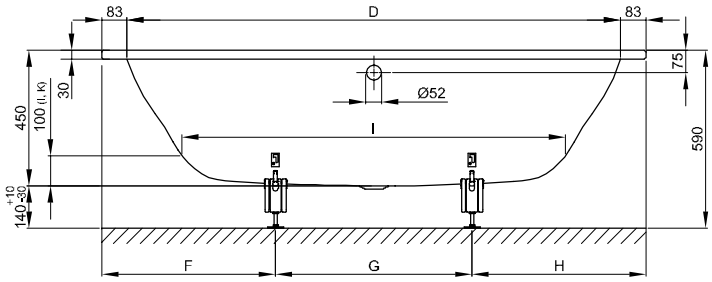

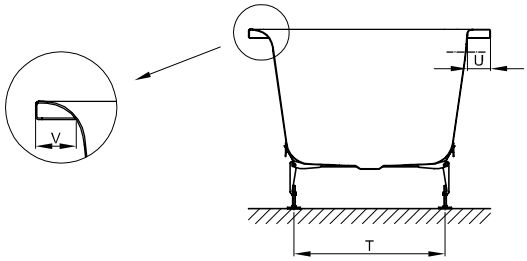

Dimensions

article no.	dimensions in mm	A	B	D	F	G	H	I	K	T	U	V	volume*
6829	1700 × 750 × 450	1700	750	1534	555	590	555	1160	485	430	76	68	150 litres
6830	1800 × 800 × 450	1800	800	1634	580	640	580	1260	535	480	76	67	180 litres
6831	1900 × 900 × 450	1900	900	1734	580	740	580	1360	635	580	76	72	210 litres
6832	2000 × 1000 × 450	2000	1000	1834	625	750	625	1460	735	680	76	73	240 litres

*bath capacity = volume + 70 litres human water displacement.

Dimensions

PG	article no.	dimensions in mm	weight (net)	pcs/pallet	White 000 → cover	coloured → cover
CO	6829	1700 × 750 × 450	47.1 kg	15	1.281 € ☗	1.459 €
CO	6830	1800 × 800 × 450	53.1 kg	15	1.409 € ☗	1.587 €
CO	6831	1900 × 900 × 450	61 kg	15	1.592 € ☗	1.770 €
CO	6832	2000 × 1000 × 450	67.2 kg	14	1.921 €	2.099 €

Extras

PG	code	description	see	price
EX	AS	BetteAnti-Slip Sense*	p. 273	190 €
EX	PLUS	BetteGlaze® Plus	p. 274	160 €
EX	HLZ	Tapholes and drilling as per special drawing	p. 276	234 €
IN		Whirlsystems	p. 378	

*Not available with Glaze® Plus. Only available in combination with White (000).

Accessories

PG	article no.	description	see	price
IN	B23-1500	Bath feet universal	p. 342	75 €
IN	B57-0372	Sealing System for baths	p. 356	106 €
IN	B57-0407	Bath divider 3300 × 120 mm	p. 359	33 €
IN	Z0008669	Wall Brackets	p. 360	40 €

Waste- and overflow fittings

PG	article no.	description	see	Chrome 901	White 000
IN	B602-	Waste- and overflow fitting Ø 52 mm, 725 mm	p. 314	154 €	177 €
IN	B603-	Waste- and overflow fitting Ø 52 mm, 1070 mm → 1900 × 900 mm, 2000 × 1000 mm	p. 315	196 €	233 €
IN	B606-	Waste, overflow and filling unit Ø 52 mm, 725 mm	p. 318	423 €	514 €
IN	B607-	Waste, overflow and filling unit Ø 52 mm, 1070 mm → 1900 × 900 mm, 2000 × 1000 mm	p. 319	469 €	552 €
IN	B619-	Waste- and overflow fitting Plus 5, Ø 52 mm, 1070 mm	p. 325	267 €	
IN	B620-	Waste, overflow and filling unit Plus 5, Ø 52 mm, 1070 mm	p. 330	529 €	

Technical information and prices of additional BetteExtras on page 270. You will find the colours in the cover. Subject to alteration and production tolerance. Prices excluding VAT.

BetteLoft

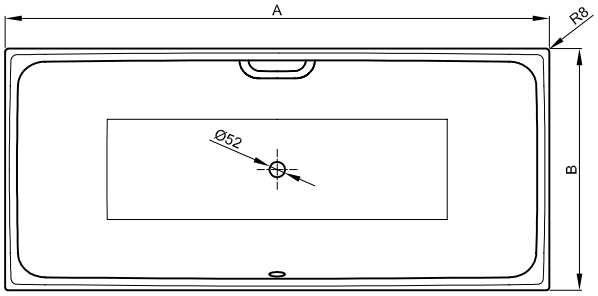

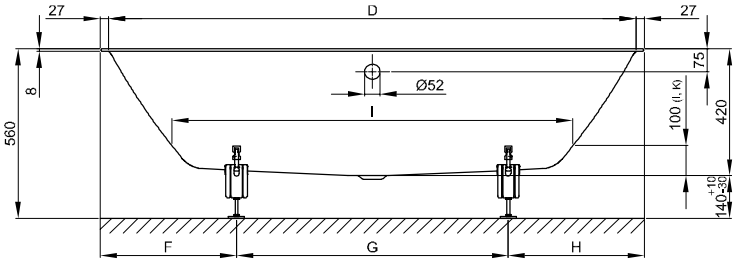

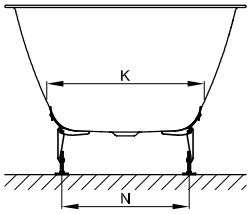

Information

Due to the folded edge, standard commercially available bath anchors cannot be combined. We therefore recommend the Wall Brackets (item no. Z0008669) for mounting.

For professional installation we recommend the use of the original bath feet B23-1500.

Available with matching washbasin BetteLoft. → p. 248

Scope of delivery

Including noise-reducing pads.

Design: Tesseraux + Partner

Dimensions

article no.	dimensions in mm	A	B	D	F	G	H	I	K	N	volume*
3171	1700 × 800 × 420	1700	800	1646	450	800	450	1223	518	445	156 litres
3172	1800 × 800 × 420	1800	800	1746	450	900	450	1327	521	445	173 litres
3173	1900 × 900 × 420	1900	900	1846	480	940	480	1426	620	455	235 litres

*bath capacity = volume + 70 litres human water displacement.

Dimensions

PG	article no.	dimensions in mm	weight (net)	pcs/pallet	White 000 → cover	coloured → cover
CO	3171	1700 × 800 × 420	45 kg	12	1.552 €	1.730 €
CO	3172	1800 × 800 × 420	48 kg	12	1.708 € ☗	1.886 €
CO	3173	1900 × 900 × 420	55 kg	12	1.919 €	2.097 €

Extras

PG	code	description	see	price
EX	AS	BetteAnti-Slip Sense*	p. 273	190 €
EX	PLUS	BetteGlaze® Plus	p. 274	160 €
IN		Whirlsystems	p. 378	

*Not available with Glaze® Plus. Only available in combination with White (000).

Accessories

PG	article no.	description	see	price
IN	B23-1500	Bath feet universal	p. 342	75 €
IN	B090-901	Grip B090, chrome*	p. 367	178 €
IN	B120-901	Grip B120, chrome*	p. 368	178 €
IN	B57-0372	Sealing System for baths	p. 356	106 €
IN	B57-0407	Bath divider 3300 × 120 mm	p. 359	33 €
IN	Z0008669	Wall Brackets	p. 360	40 €

* The baths need to be ordered with the ending 1GR.

Waste- and overflow fittings

PG	article no.	description	see	Chrome 901	White 000
IN	B602-	Waste- and overflow fitting Ø 52 mm, 725 mm	p. 314	154 €	177 €
IN	B603-	Waste- and overflow fitting Ø 52 mm, 1070 mm → 1900 × 900 mm	p. 315	196 €	233 €
IN	B606-	Waste, overflow and filling unit Ø 52 mm, 725 mm	p. 318	423 €	514 €
IN	B607-	Waste, overflow and filling unit Ø 52 mm, 1070 mm → 1900 × 900 mm	p. 319	469 €	552 €
IN	B619-	Waste- and overflow fitting Plus 5, Ø 52 mm, 1070 mm	p. 325	267 €	
IN	B620-	Waste, overflow and filling unit Plus 5, Ø 52 mm, 1070 mm	p. 330	529 €	

Technical information and prices of additional BetteExtras on page 270. You will find the colours in the cover. Subject to alteration and production tolerance. Prices excluding VAT.

BetteLoft Ornament

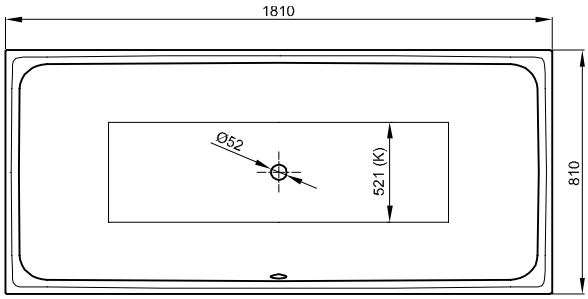

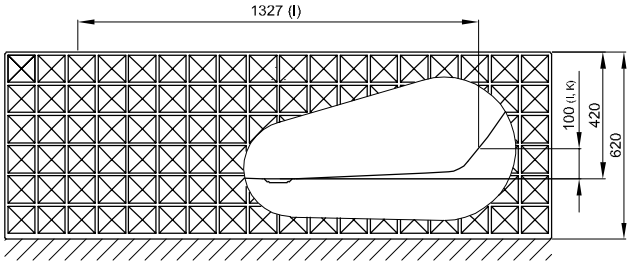

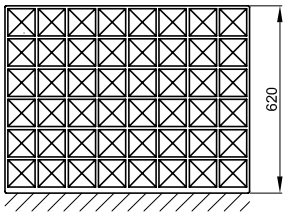

Information

If this bath is ordered with waste fitting this will come prefitted. If ordered with Trio waste the bath comes with prefitted Sanfix tube for water supply. A flexible drain pipe is generally included in delivery.

Available with matching washbasin BetteLoft Ornament. → p. 254

Scope of delivery

Including noise-reducing pads.

Design: Tesseraux + Partner

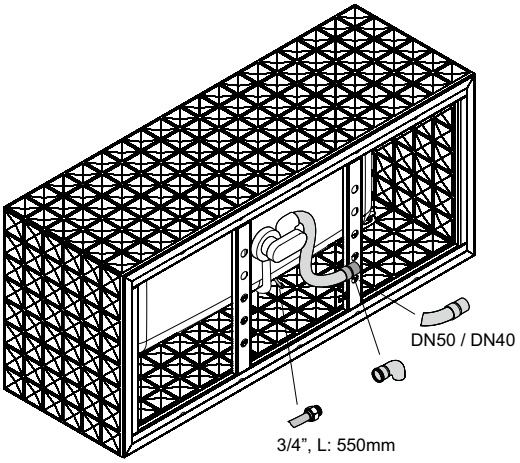

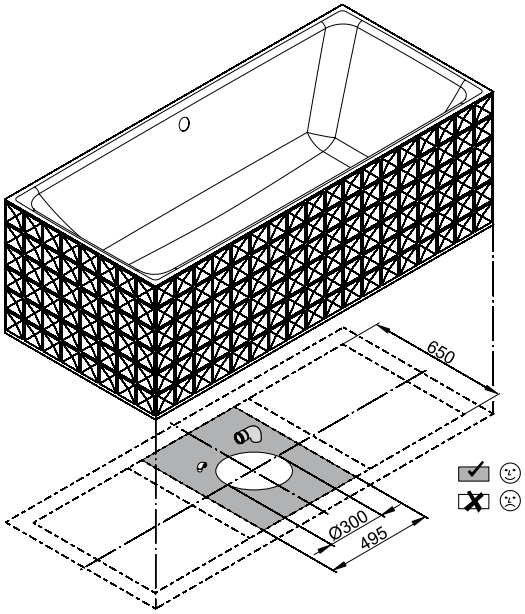

Adequate position to connect the drainage

Dimensions

article no.	dimensions in mm	volume*
3172 CFXX6A	1810 × 810 × 420	173 litres

*bath capacity = volume + 70 litres human water displacement.

Dimensions

PG	article no.	dimensions in mm	weight (net)	White 000 → cover	coloured → cover
CO	3172 CFXX6A	1810 × 810 × 420	110 kg	6.520 €	7.287 €

Please note the ordering information on page 5.

Extras

PG	code	description	see	price
EX	AS	BetteAnti-Slip Sense*	p. 273	190 €
EX	PLUS	BetteGlaze® Plus	p. 274	160 €

*Not available with Glaze® Plus. Only available in combination with White (000).

Waste- and overflow fittings

PG	article no.	description	see	Chrome 901	White 000
IN	B601-	Waste- and overflow fitting Silhouette Ø 52 mm, 725 mm	p. 313	214 €	245 €
IN	B605-	Waste, overflow and filling unit Silhouette Ø 52 mm, 725 mm	p. 317	606 €	692 €
IN	B625-	Waste- and overflow fitting Plus 5 Silhouette Ø 52 mm, 1070 mm	p. 327	346 €	
IN	B626-	Waste, overflow and filling unit Plus 5 Silhouette Ø 52 mm, 1070 mm	p. 332	731 €	

Technical information and prices of additional BetteExtras on page 270. You will find the colours in the cover. Subject to alteration and production tolerance. Prices excluding VAT.

BetteLuna

N° 1: foot end left

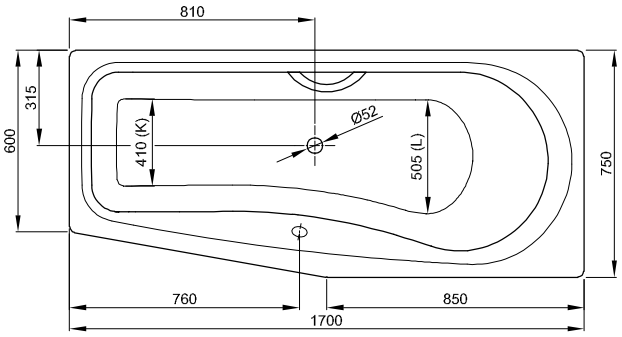

N° 1: foot end left

N° 2: foot end right

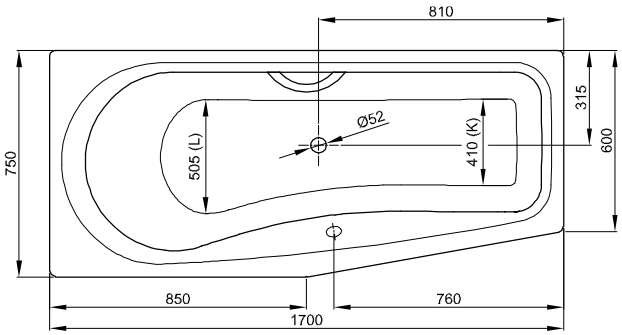

N° 2: foot end right

Information

Increased water level due to angled overflow.

For professional installation we recommend the use of the original bath feet B23-1500.

If the bath is to be fitted under a panel, please contact us for individual cut-out details.

Design: schmiddem design

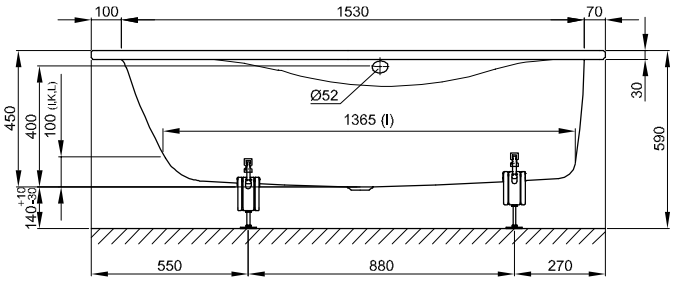

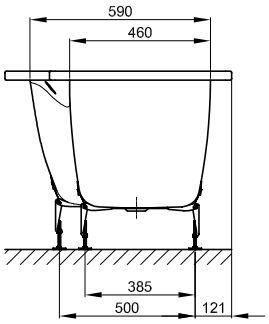

N° 2: foot end right

Dimensions

article no.	dimensions in mm	variant	volume*
2750	1700 × 750 × 450	№ 1	158 litres
2760	1700 × 750 × 450	№ 2	158 litres

*bath capacity = volume + 70 litres human water displacement.

Dimensions

PG	article no.	dimensions in mm	variant	weight (net)	pcs/pallet	White 000 → cover	coloured → cover
CO	2750	1700 × 750 × 450	№ 1	48.5 kg	8	1.069 € ☗	1.247 €
CO	2760	1700 × 750 × 450	№ 2	48.5 kg	8	1.069 € ☗	1.247 €

Extras

PG	code	description	see	price
EX	AS	BetteAnti-Slip Sense*	p. 273	190 €
EX	PLUS	BetteGlaze® Plus	p. 274	160 €
EX	HLZ	Tapholes and drilling as per special drawing	p. 276	234 €
EX		Profi Corner	p. 284	from 404 €
IN		Whirlsystems	p. 378	

*Not available with Glaze® Plus. Only available in combination with White (000).

Accessories

PG	article no.	description	see	price
IN	B23-1500	Bath feet universal	p. 342	75 €
IN	B090-901	Grip B090, chrome*	p. 367	178 €
IN	B120-901	Grip B120, chrome*	p. 368	178 €
IN	B57-0372	Sealing System for baths	p. 356	106 €
IN	B57-0407	Bath divider 3300 × 120 mm	p. 359	33 €
IN	Z0008669	Wall Brackets	p. 360	40 €

* The baths need to be ordered with the ending 1GR.

Waste- and overflow fittings

PG	article no.	description	see	Chrome 901	White 000
IN	B602-	Waste- and overflow fitting Ø 52 mm, 725 mm	p. 314	154 €	177 €
IN	B606-	Waste, overflow and filling unit Ø 52 mm, 725 mm	p. 318	423 €	514 €

Technical information and prices of additional BetteExtras on page 270. You will find the colours in the cover. Subject to alteration and production tolerance. Prices excluding VAT.

BetteLux

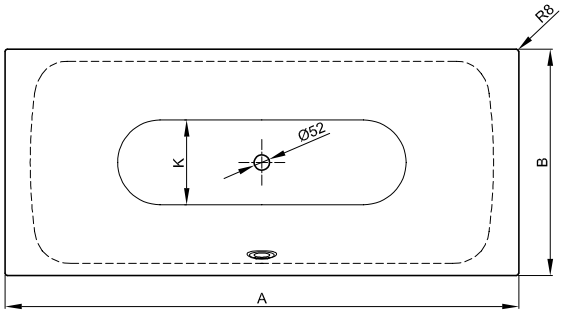

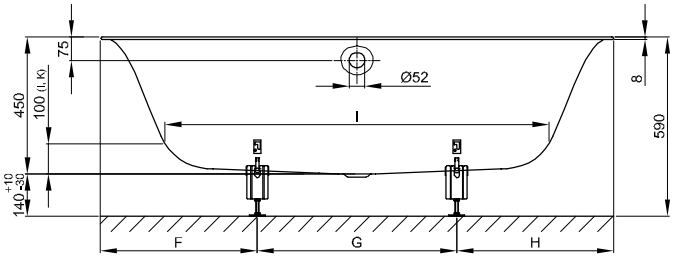

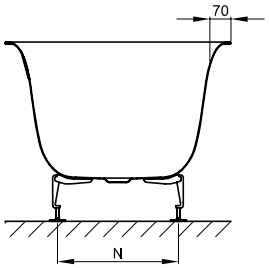

Information

Due to the folded edge, standard commercially available bath anchors cannot be combined. We therefore recommend the Wall Brackets (item no. Z0008669) for mounting.

For professional installation we recommend the use of the original bath feet B23-1500.

Available with matching washbasin BetteLux. → p. 258

Scope of delivery

Including noise-reducing pads.

Design: Tesseraux + Partner

Dimensions

article no.	dimensions in mm	A	B	F	G	H	I	K	N	volume*
3440	1700 × 750 × 450	1700	750	495	710	495	1270	505	400	156 litres
3441	1800 × 800 × 450	1800	800	495	810	495	1345	545	450	185 litres
3442	1900 × 900 × 450	1900	900	520	860	520	1420	615	500	234 litres

*bath capacity = volume + 70 litres human water displacement.

Dimensions

PG	article no.	dimensions in mm	weight (net)	pcs/pallet	White 000 → cover	coloured → cover
CO	3440	1700 × 750 × 450	41 kg	12	1.630 € ☗	1.808 €
CO	3441	1800 × 800 × 450	45 kg	12	1.793 € ☗	1.971 €
CO	3442	1900 × 900 × 450	50 kg	12	2.015 € ☗	2.193 €

Extras

PG	code	description	see	price
EX	AS	BetteAnti-Slip Sense*	p. 273	190 €
EX	PLUS	BetteGlaze® Plus	p. 274	160 €
IN		Whirlsystems	p. 378	

*Not available with Glaze® Plus. Only available in combination with White (000).

Accessories

PG	article no.	description	see	price
IN	B23-1500	Bath feet universal	p. 342	75 €
IN	B57-0372	Sealing System for baths	p. 356	106 €
IN	B57-0407	Bath divider 3300 × 120 mm	p. 359	33 €
IN	Z0008669	Wall Brackets	p. 360	40 €

Waste- and overflow fittings

PG	article no.	description	see	Chrome 901	White 000
IN	B602-	Waste- and overflow fitting Ø 52 mm, 725 mm	p. 314	154 €	177 €
IN	B603-	Waste- and overflow fitting Ø 52 mm, 1070 mm → 1900 × 900 mm	p. 315	196 €	233 €
IN	B606-	Waste, overflow and filling unit Ø 52 mm, 725 mm	p. 318	423 €	514 €
IN	B607-	Waste, overflow and filling unit Ø 52 mm, 1070 mm → 1900 × 900 mm	p. 319	469 €	552 €
IN	B619-	Waste- and overflow fitting Plus 5, Ø 52 mm, 1070 mm	p. 325	267 €	
IN	B620-	Waste, overflow and filling unit Plus 5, Ø 52 mm, 1070 mm	p. 330	529 €	

Technical information and prices of additional BetteExtras on page 270. You will find the colours in the cover. Subject to alteration and production tolerance. Prices excluding VAT.

BetteLux Silhouette

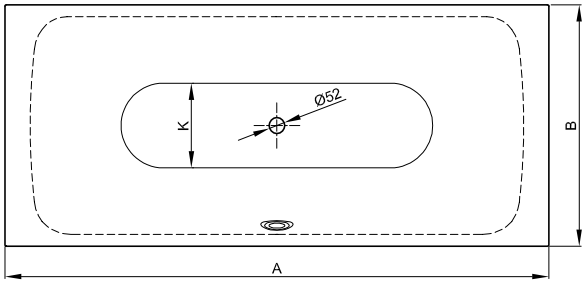

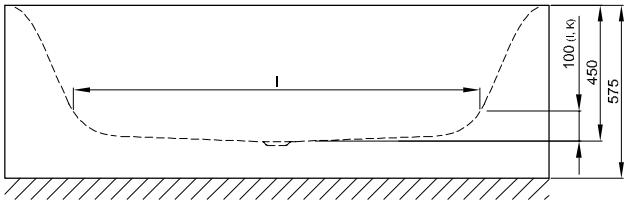

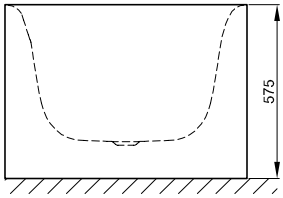

Information

If this bath is ordered with waste fitting this will come prefitted. If ordered with Trio waste the bath comes with prefitted Sanfix tube for water supply. A flexible drain pipe is generally included in delivery.

If combined with BetteWhirlsystems it is necessary to provide an adequate air supply under the bath.

Available with matching washbasin BetteLux. → p. 258

Scope of delivery

Including noise-reducing pads.

Design: Tesseraux + Partner

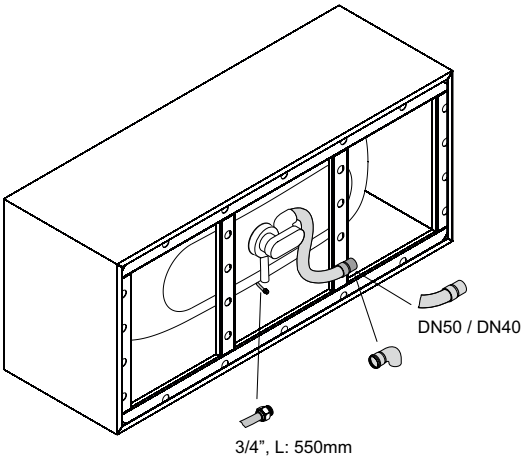

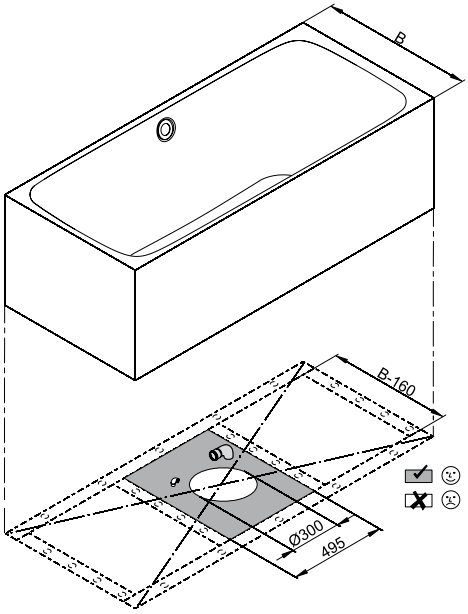

Adequate position to connect the drainage

Dimensions

article no.	dimensions in mm	A	B	I	K	volume*
3440 CFXXS	1700 × 750 × 450	1700	750	1270	505	156 litres
3441 CFXXS	1800 × 800 × 450	1800	800	1345	545	185 litres

*bath capacity = volume + 70 litres human water displacement.

Dimensions

PG	article no.	dimensions in mm	weight (net)	White 000 → cover	coloured → cover
CO	3440 CFXXS	1700 × 750 × 450	102 kg	5.007 €	5.774 €
CO	3441 CFXXS	1800 × 800 × 450	112 kg	5.507 €	6.274 €

Please note the ordering information on page 5.

Extras

PG	code	description	see	price
EX	AS	BetteAnti-Slip Sense*	p. 273	190 €
EX	PLUS	BetteGlaze® Plus	p. 274	160 €
IN		Whirlsystems	p. 378	

*Not available with Glaze® Plus. Only available in combination with White (000).

Waste- and overflow fittings

PG	article no.	description	see	Chrome 901	White 000
IN	B601-	Waste- and overflow fitting Silhouette Ø 52 mm, 725 mm	p. 313	214 €	245 €
IN	B605-	Waste, overflow and filling unit Silhouette Ø 52 mm, 725 mm	p. 317	606 €	692 €
IN	B625-	Waste- and overflow fitting Plus 5 Silhouette Ø 52 mm, 1070 mm	p. 327	346 €	
IN	B626-	Waste, overflow and filling unit Plus 5 Silhouette Ø 52 mm, 1070 mm	p. 332	731 €	

Technical information and prices of additional BetteExtras on page 270. You will find the colours in the cover. Subject to alteration and production tolerance. Prices excluding VAT.

BetteLux Silhouette Side

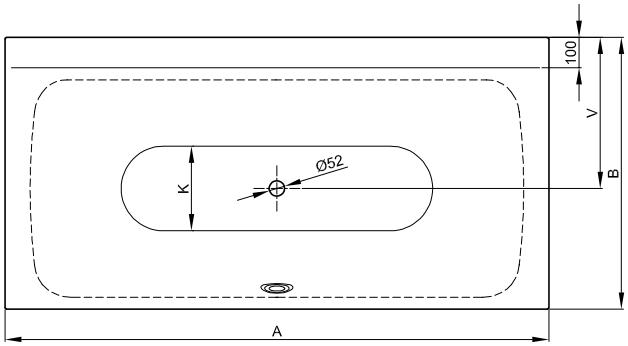

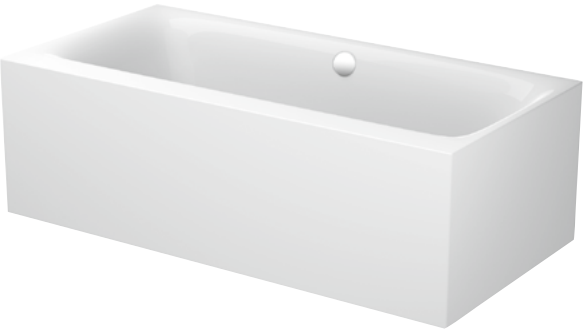

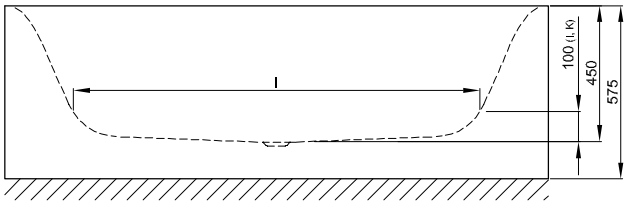

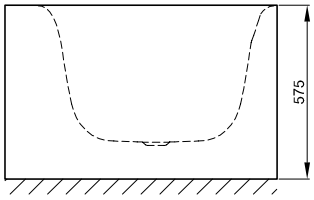

Information

If this bath is ordered with waste fitting this will come prefitted. If ordered with Trio waste the bath comes with prefitted Sanfix tube for water supply. A flexible drain pipe is generally included in delivery.

If combined with BetteWhirlsystems it is necessary to provide an adequate air supply under the bath.

Available with matching washbasin BetteLux. → p. 258

Scope of delivery

Including noise-reducing pads.

Design: Tesseraux + Partner

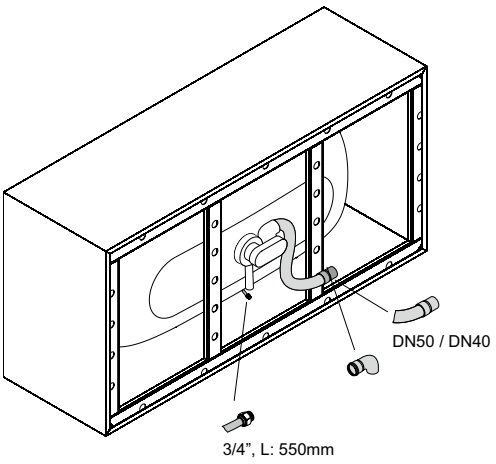

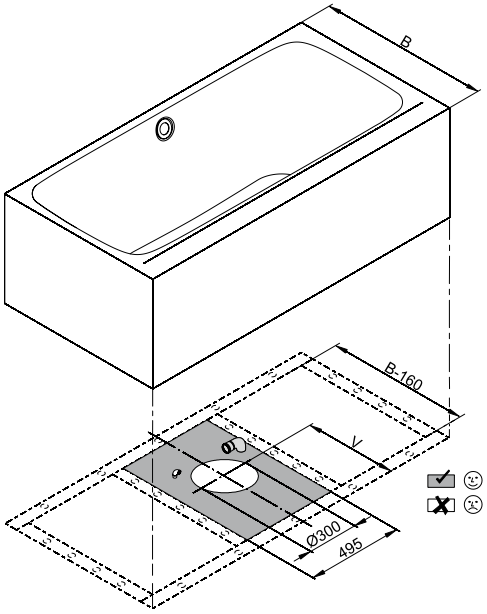

Adequate position to connect the drainage

Dimensions

article no.	dimensions in mm	A	B	I	K	V	volume*
3460 CFXVS	1700 × 850 × 450	1700	850	1270	507	475	156 litres
3461 CFXVS	1800 × 900 × 450	1800	900	1345	545	500	185 litres

*bath capacity = volume + 70 litres human water displacement.

Dimensions

PG	article no.	dimensions in mm	weight (net)	White 000 → cover	coloured → cover
CO	3460 CFXVS	1700 × 850 × 450	112 kg	5.257 €	6.024 €
CO	3461 CFXVS	1800 × 900 × 450	126 kg	5.507 €	6.274 €

Please note the ordering information on page 5.

Extras

PG	code	description	see	price
EX	AS	BetteAnti-Slip Sense*	p. 273	190 €
EX	PLUS	BetteGlaze® Plus	p. 274	160 €
EX	HLZ	Tapholes and drilling as per special drawing	p. 276	234 €
IN		Whirlsystems	p. 378	

*Not available with Glaze® Plus. Only available in combination with White (000).

Waste- and overflow fittings

PG	article no.	description	see	Chrome 901	White 000
IN	B601-	Waste- and overflow fitting Silhouette Ø 52 mm, 725 mm	p. 313	214 €	245 €
IN	B605-	Waste, overflow and filling unit Silhouette Ø 52 mm, 725 mm	p. 317	606 €	692 €
IN	B625-	Waste- and overflow fitting Plus 5 Silhouette Ø 52 mm, 1070 mm	p. 327	346 €	
IN	B626-	Waste, overflow and filling unit Plus 5 Silhouette Ø 52 mm, 1070 mm	p. 332	731 €	

Technical information and prices of additional BetteExtras on page 270. You will find the colours in the cover. Subject to alteration and production tolerance. Prices excluding VAT.

BetteLux I Silhouette Side

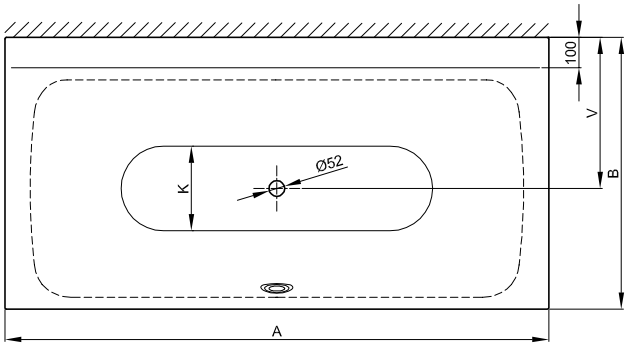

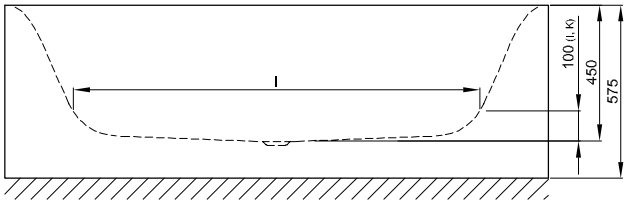

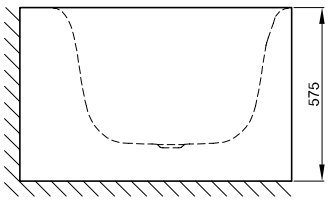

Information

If this bath is ordered with waste fitting this will come prefitted. If ordered with Trio waste the bath comes with prefitted Sanfix tube for water supply. A flexible drain pipe is generally included in delivery.

If combined with BetteWhirlsystems it is necessary to provide an adequate air supply under the bath.

Available with matching washbasin BetteLux. → p. 258

Scope of delivery

Including noise-reducing pads.

Design: Tesseraux + Partner

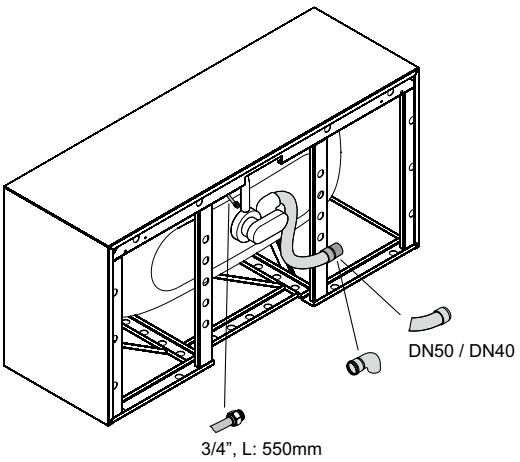

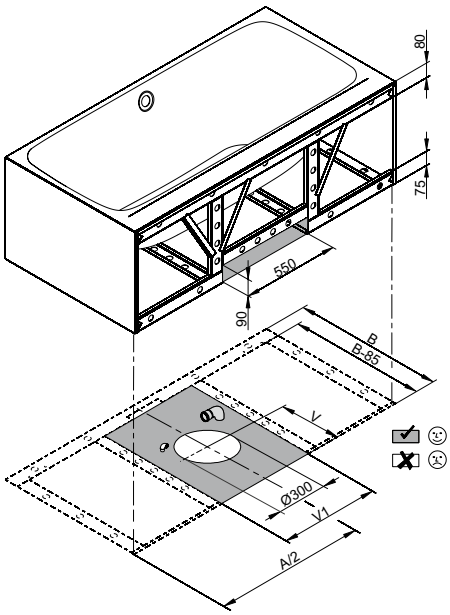

Adequate position to connect the drainage

Dimensions

article no.	dimensions in mm	A	B	I	K	V	V1	volume*
3460 CWVVS	1700 × 850 × 450	1700	850	1270	507	475	545	156 litres
3461 CWVVS	1800 × 900 × 450	1800	900	1345	545	500	550	185 litres

*bath capacity = volume + 70 litres human water displacement.

Dimensions

PG	article no.	dimensions in mm	weight (net)	White 000 → cover	coloured → cover
CO	3460 CWVVS	1700 × 850 × 450	125 kg	5.103 €	5.870 €
CO	3461 CWVVS	1800 × 900 × 450	132 kg	5.346 €	6.113 €

Please note the ordering information on page 5.

Extras

PG	code	description	see	price
EX	AS	BetteAnti-Slip Sense*	p. 273	190 €
EX	PLUS	BetteGlaze® Plus	p. 274	160 €
EX	HLZ	Tapholes and drilling as per special drawing	p. 276	234 €
IN		Whirlsystems	p. 378	

*Not available with Glaze® Plus. Only available in combination with White (000).

Waste- and overflow fittings

PG	article no.	description	see	Chrome 901	White 000
IN	B601-	Waste- and overflow fitting Silhouette Ø 52 mm, 725 mm	p. 313	214 €	245 €
IN	B605-	Waste, overflow and filling unit Silhouette Ø 52 mm, 725 mm	p. 317	606 €	692 €
IN	B625-	Waste- and overflow fitting Plus 5 Silhouette Ø 52 mm, 1070 mm	p. 327	346 €	
IN	B626-	Waste, overflow and filling unit Plus 5 Silhouette Ø 52 mm, 1070 mm	p. 332	731 €	

Technical information and prices of additional BetteExtras on page 270. You will find the colours in the cover. Subject to alteration and production tolerance. Prices excluding VAT.

BetteLux IV Silhouette Side

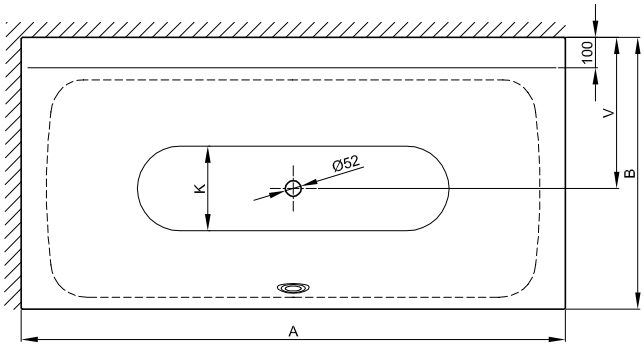

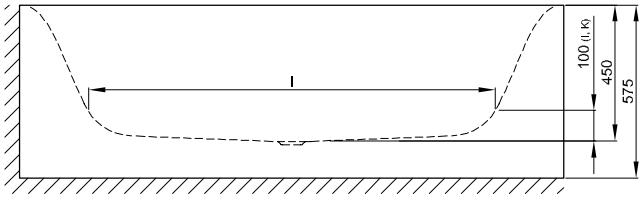

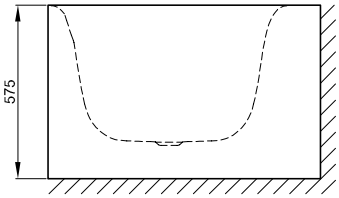

Information

If this bath is ordered with waste fitting this will come prefitted. If ordered with Trio waste the bath comes with prefitted Sanfix tube for water supply. A flexible drain pipe is generally included in delivery.

If combined with BetteWhirlsystems it is necessary to provide an adequate air supply under the bath.

Available with matching washbasin BetteLux. → p. 258

Scope of delivery

Including noise-reducing pads.

Design: Tesseraux + Partner

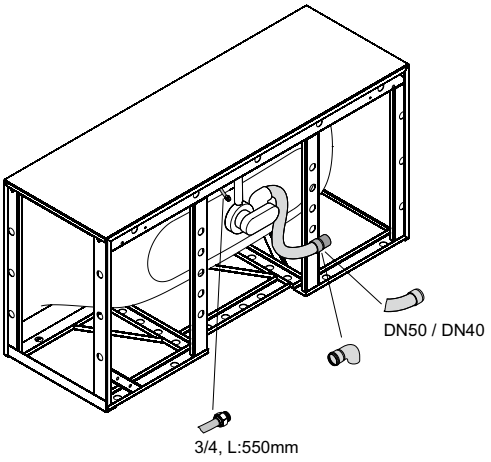

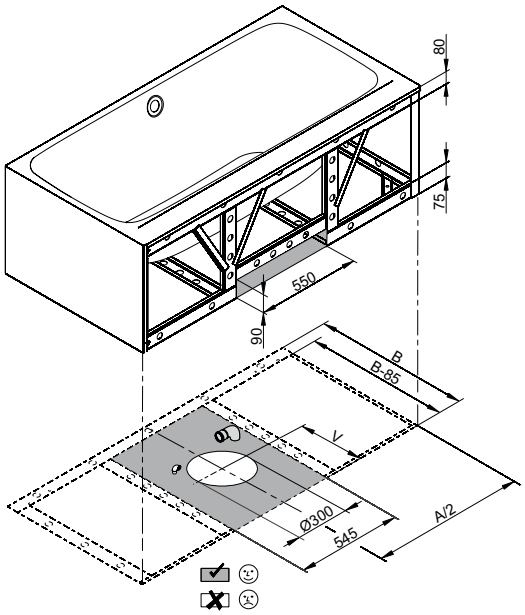

Adequate position to connect the drainage

Dimensions

article no.	dimensions in mm	A	B	I	K	V	volume*
3460 CERVS	1700 × 850 × 450	1700	850	1270	507	475	156 litres
3461 CERVS	1800 × 900 × 450	1800	900	1345	545	500	185 litres

*bath capacity = volume + 70 litres human water displacement.

Dimensions

PG	article no.	dimensions in mm	weight (net)	White 000 → cover	coloured → cover
CO	3460 CERVS	1700 × 850 × 450	100 kg	4.639 €	5.406 €
CO	3461 CERVS	1800 × 900 × 450	106 kg	4.860 €	5.627 €

Please note the ordering information on page 5.

Extras

PG	code	description	see	price
EX	AS	BetteAnti-Slip Sense*	p. 273	190 €
EX	PLUS	BetteGlaze® Plus	p. 274	160 €
EX	HLZ	Tapholes and drilling as per special drawing	p. 276	234 €
IN		Whirlsystems	p. 378	

*Not available with Glaze® Plus. Only available in combination with White (000).

Waste- and overflow fittings

PG	article no.	description	see	Chrome 901	White 000
IN	B601-	Waste- and overflow fitting Silhouette Ø 52 mm, 725 mm	p. 313	214 €	245 €
IN	B605-	Waste, overflow and filling unit Silhouette Ø 52 mm, 725 mm	p. 317	606 €	692 €
IN	B625-	Waste- and overflow fitting Plus 5 Silhouette Ø 52 mm, 1070 mm	p. 327	346 €	
IN	B626-	Waste, overflow and filling unit Plus 5 Silhouette Ø 52 mm, 1070 mm	p. 332	731 €	

Technical information and prices of additional BetteExtras on page 270. You will find the colours in the cover. Subject to alteration and production tolerance. Prices excluding VAT.

BetteLux V Silhouette Side

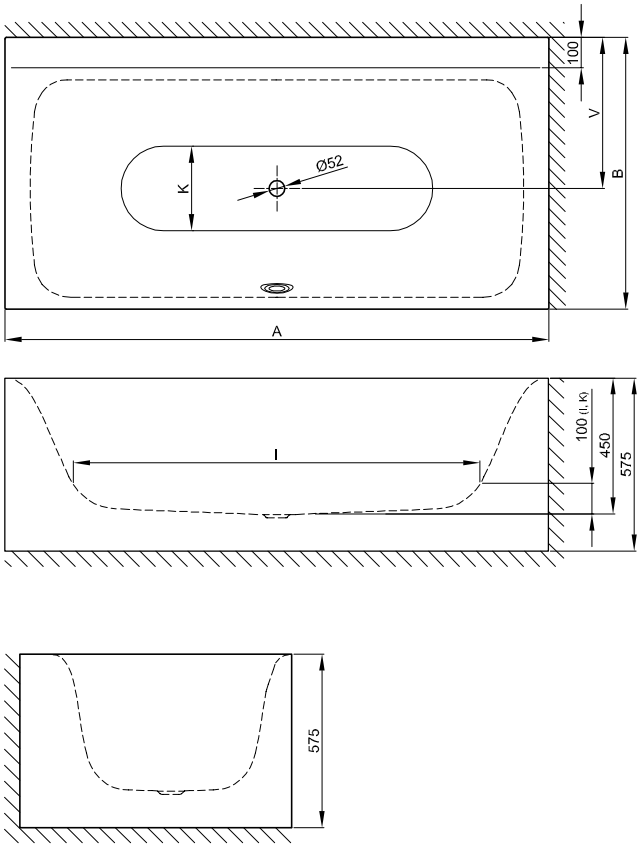

Information

If this bath is ordered with waste fitting this will come prefitted. If ordered with Trio waste the bath comes with prefitted Sanfix tube for water supply. A flexible drain pipe is generally included in delivery.

If combined with BetteWhirlsystems it is necessary to provide an adequate air supply under the bath.

Available with matching washbasin BetteLux. → p. 258

Scope of delivery

Including noise-reducing pads.

Design: Tesseraux + Partner

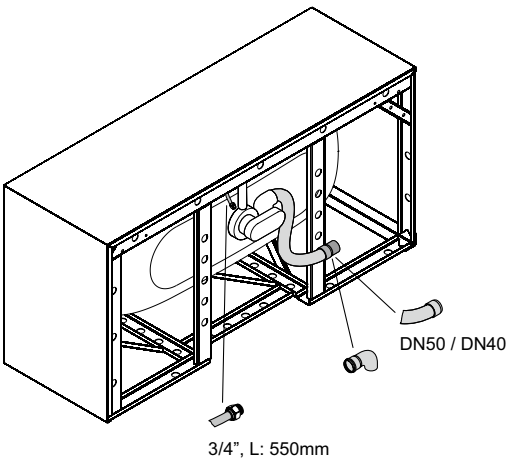

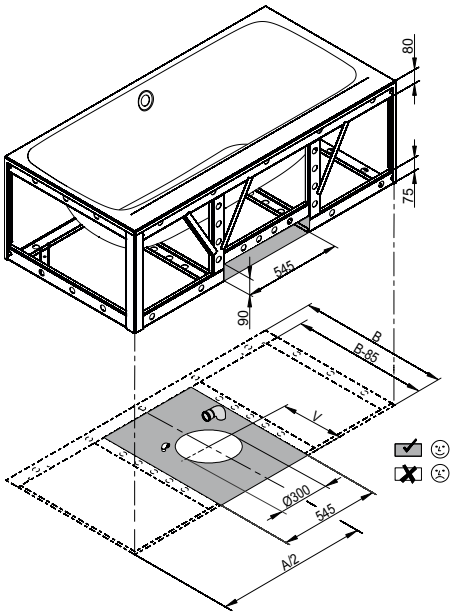

Adequate position to connect the drainage

Dimensions

article no.	dimensions in mm	A	B	I	K	V	volume*
3460 CELVS	1700 × 850 × 450	1700	850	1270	507	475	156 litres
3461 CELVS	1800 × 900 × 450	1800	900	1345	545	500	185 litres

*bath capacity = volume + 70 litres human water displacement.

Dimensions

PG	article no.	dimensions in mm	weight (net)	White 000 → cover	coloured → cover
CO	3460 CELVS	1700 × 850 × 450	100 kg	4.639 €	5.406 €
CO	3461 CELVS	1800 × 900 × 450	106 kg	4.860 €	5.627 €

Please note the ordering information on page 5.

Extras

PG	code	description	see	price
EX	AS	BetteAnti-Slip Sense*	p. 273	190 €
EX	PLUS	BetteGlaze® Plus	p. 274	160 €
EX	HLZ	Tapholes and drilling as per special drawing	p. 276	234 €
IN		Whirlsystems	p. 378	

*Not available with Glaze® Plus. Only available in combination with White (000).

Waste- and overflow fittings

PG	article no.	description	see	Chrome 901	White 000
IN	B601-	Waste- and overflow fitting Silhouette Ø 52 mm, 725 mm	p. 313	214 €	245 €
IN	B605-	Waste, overflow and filling unit Silhouette Ø 52 mm, 725 mm	p. 317	606 €	692 €
IN	B625-	Waste- and overflow fitting Plus 5 Silhouette Ø 52 mm, 1070 mm	p. 327	346 €	
IN	B626-	Waste, overflow and filling unit Plus 5 Silhouette Ø 52 mm, 1070 mm	p. 332	731 €	

Technical information and prices of additional BetteExtras on page 270. You will find the colours in the cover. Subject to alteration and production tolerance. Prices excluding VAT.

BetteLux Shape

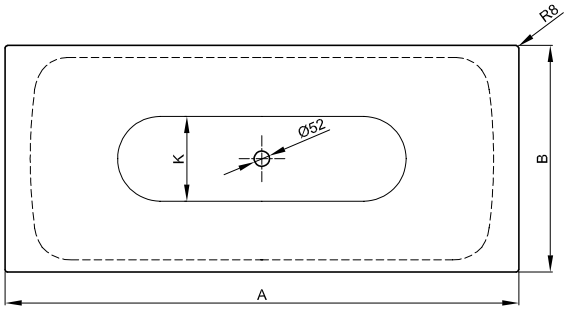

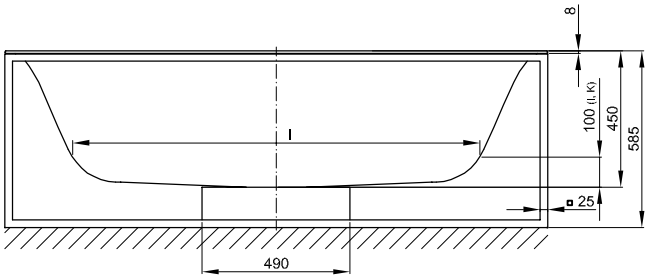

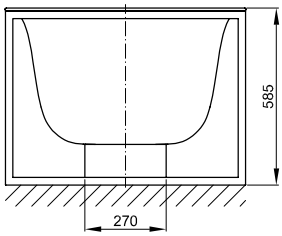

Information

The BetteLux Shape is enamelled on the inside and outside and delivered without overflow. The overflow function is safeguarded by a pressure sensor integrated in the pop-up waste.

A 12 V electrical connection under the bath is needed for the installation of the pop-up waste. Delivery includes two 8 m long cables for connection to the control box. The control box can be integrated in a concealed socket and needs a 230 V electrical connection.

Baths and frame are fixed at the factory, but must be ordered separately. An order of the individual components is not possible.

The BetteSensory must be ordered separately.

Available with matching washbasin BetteLux Shape. → p. 260

Scope of delivery

- waste and overflow set sensory (pre-assembled)
- control box
- 12v power supply
- emergency battery
- two 8m long control cables
- drain box in frame colour

Design: Tesseraux + Partner

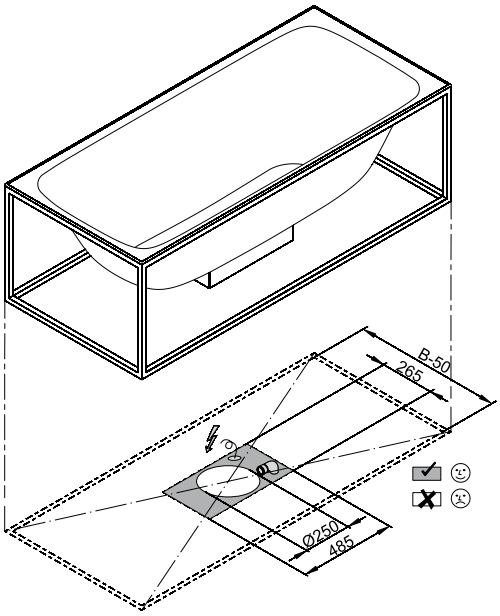

Adequate position to connect the drainage

Dimensions

article no.	dimensions in mm	A	B	I	K	volume*
3451	1700 × 750 × 450	1700	750	1270	507	156 litres
3452	1800 × 800 × 450	1800	800	1345	545	185 litres
3453	1900 × 900 × 450	1900	900	1420	615	234 litres

*bath capacity = volume + 70 litres human water displacement.

Dimensions

PG	article no.	dimensions in mm	weight (net)	White 000 → cover	coloured → cover
CO	3451	1700 × 750 × 450	41.6 kg	2.488 €	2.666 €
CO	3452	1800 × 800 × 450	46.2 kg	2.737 €	2.915 €
CO	3453	1900 × 900 × 450	54.2 kg	2.986 €	3.164 €

Please note the ordering information on page 5.

Extras

PG	code	description	see	price
EX	AS	BetteAnti-Slip Sense*	p. 273	190 €
EX	PLUS	BetteGlaze® Plus	p. 274	160 €

*Not available with Glaze® Plus. Only available in combination with White (000).

Waste- and overflow fittings (required accessories)

PG	article no.	description	see	Chrome 901	White 000
IN	B631-	BetteSensory*	p. 338	1.040 €	1.151 €

* The baths need to be ordered with the ending oUeL.

Frame (required accessories)

PG	article no.	dimensions in mm	White matt 807 Black matt 815 → cover
IN	Q001	1700 × 750 × 575	1.839 €
IN	Q002	1800 × 800 × 575	1.931 €
IN	Q003	1900 × 900 × 575	2.023 €

Technical information and prices of additional BetteExtras on page 270. You will find the colours in the cover. Subject to alteration and production tolerance. Prices excluding VAT.

BetteLux Oval

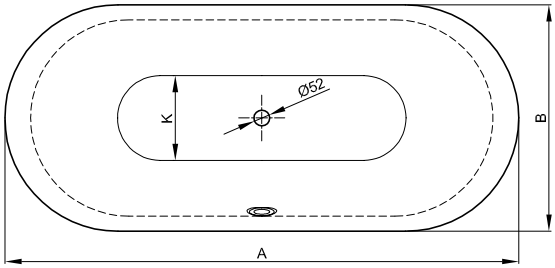

Information

Due to the folded edge, standard commercially available bath anchors cannot be combined. We therefore recommend the Wall Brackets (item no. Z0008669) for mounting.

For professional installation we recommend the use of the original bath feet B23-1500.

Available with matching washbasin BetteLux Oval. → p. 262

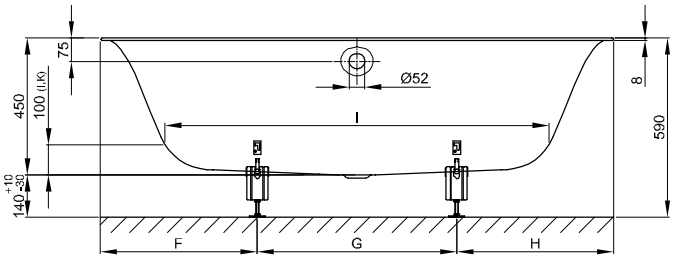

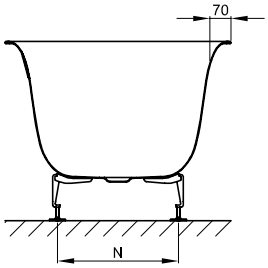

Scope of delivery

Including noise-reducing pads.

Design: Tesseraux + Partner

Dimensions

article no.	dimensions in mm	A	B	F	G	H	I	K	N	volume*
3465	1700 × 750 × 450	1700	750	500	700	500	1270	515	395	150 litres
3466	1800 × 800 × 450	1800	800	500	800	500	1340	545	445	177 litres
3467	1900 × 900 × 450	1900	900	520	860	520	1420	618	545	224 litres

*bath capacity = volume + 70 litres human water displacement.

Dimensions

PG	article no.	dimensions in mm	weight (net)	White 000 → cover	coloured → cover
CO	3465	1700 × 750 × 450	43.5 kg	2.141 €	2.319 €
CO	3466	1800 × 800 × 450	47.5 kg	2.355 € ☗	2.533 €
CO	3467	1900 × 900 × 450	52.5 kg	2.569 €	2.747 €

Extras

PG	code	description	see	price
EX	AS	BetteAnti-Slip Sense*	p. 273	190 €
EX	PLUS	BetteGlaze® Plus	p. 274	160 €
IN		Whirlsystems	p. 378	

*Not available with Glaze® Plus. Only available in combination with White (000).

Accessories

PG	article no.	description	see	price
IN	B23-1500	Bath feet universal	p. 342	75 €
IN	B57-0407	Bath divider 3300 × 120 mm	p. 359	33 €
IN	Z0008669	Wall Brackets	p. 360	40 €

Waste- and overflow fittings

PG	article no.	description	see	Chrome 901	White 000
IN	B602-	Waste- and overflow fitting Ø 52 mm, 725 mm	p. 314	154 €	177 €
IN	B606-	Waste, overflow and filling unit Ø 52 mm, 725 mm	p. 318	423 €	514 €
IN	B619-	Waste- and overflow fitting Plus 5, Ø 52 mm, 1070 mm	p. 325	267 €	
IN	B620-	Waste, overflow and filling unit Plus 5, Ø 52 mm, 1070 mm	p. 330	529 €	

Technical information and prices of additional BetteExtras on page 270. You will find the colours in the cover. Subject to alteration and production tolerance. Prices excluding VAT.

BetteLux Oval Couture

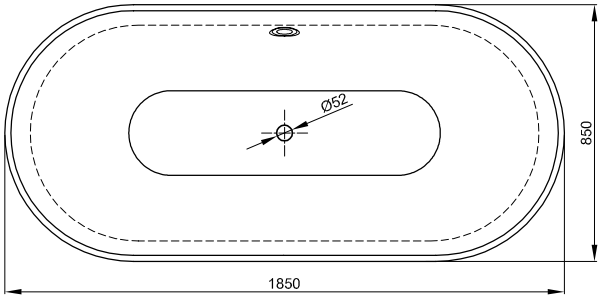

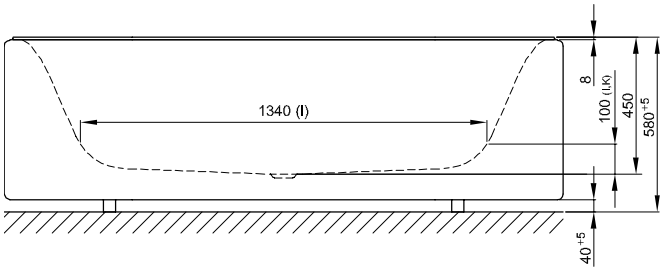

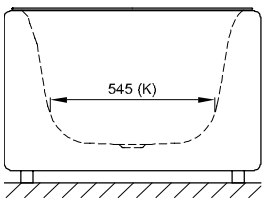

Information

Bath and upholstered fabric panel are fixed at the factory, but must be ordered separately.

If this bath is ordered with waste fitting this will come prefitted. If ordered with Trio waste the bath comes with prefitted Sanfix tube for water supply. A flexible drain pipe is generally included in delivery.

Available with matching washbasin BetteLux Oval Couture. → p. 264

Scope of delivery

Including noise-reducing pads.

Design: Tesseraux + Partner

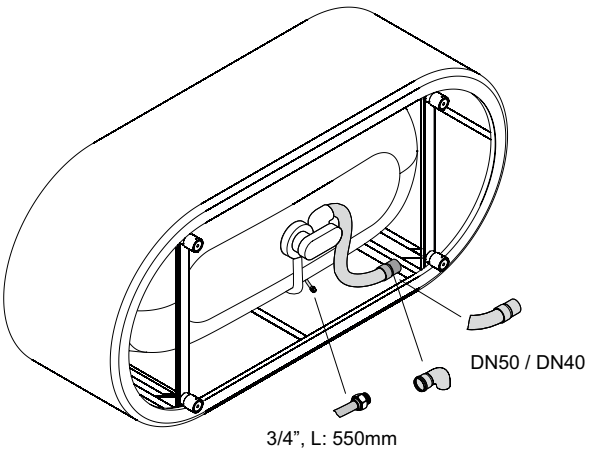

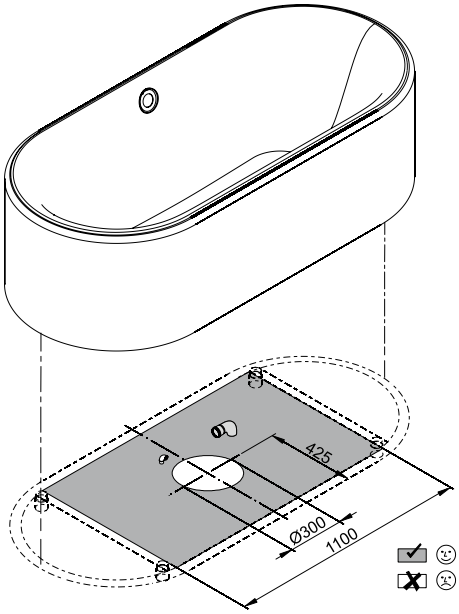

Adequate position to connect the drainage

Dimensions

article no.	dimensions in mm	volume*
3466 TX	1800 × 800 × 450	177 litres

*bath capacity = volume + 70 litres human water displacement.

Dimensions

PG	article no.	dimensions in mm	weight (net)	White 000 → cover	coloured → cover
CO	3466 TX	1800 × 800 × 450	47.5 kg	2.355 €	2.533 €

Please note the ordering information on page 5.

Extras

PG	code	description	see	price
EX	AS	BetteAnti-Slip Sense*	p. 273	190 €
EX	PLUS	BetteGlaze® Plus	p. 274	160 €

*Not available with Glaze® Plus. Only available in combination with White (000).

Waste- and overflow fittings

PG	article no.	description	see	Chrome 901	White 000
IN	B601-	Waste- and overflow fitting Silhouette Ø 52 mm, 725 mm	p. 313	214 €	245 €
IN	B605-	Waste, overflow and filling unit Silhouette Ø 52 mm, 725 mm	p. 317	606 €	692 €
IN	B625-	Waste- and overflow fitting Plus 5 Silhouette Ø 52 mm, 1070 mm	p. 327	346 €	
IN	B626-	Waste, overflow and filling unit Plus 5 Silhouette Ø 52 mm, 1070 mm	p. 332	731 €	

Upholstered Fabric-panel (required accessories)

PG	article no.	dimensions in mm	Ivory 850 Elephant 852 Carbon 853 → cover
IN	B804-	1850 × 850 × 580	9.452 €

Technical information and prices of additional BetteExtras on page 270. You will find the colours in the cover. Subject to alteration and production tolerance. Prices excluding VAT.

BetteLux Oval Highline

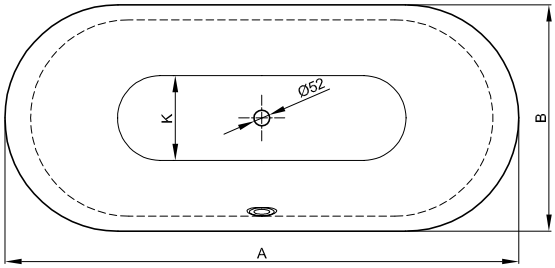

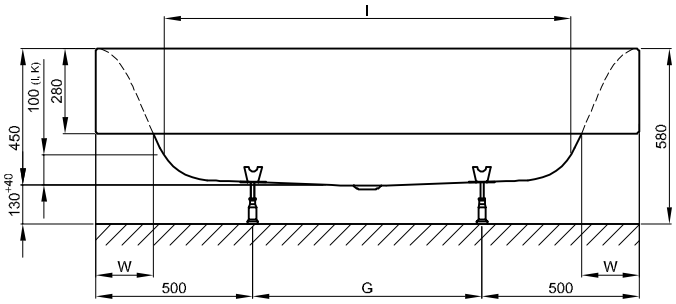

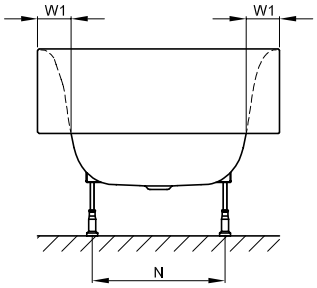

Information

For professional installation we recommend the use of the original bath feet B50-0015.

Available with matching washbasin BetteLux Oval. → p. 262

Scope of delivery

Including noise-reducing pads.

Design: Tesseraux + Partner

Dimensions

article no.	dimensions in mm	A	B	G	I	K	N	W	W1	volume*
3466 CFXXH	1800 × 800 × 450	1800	800	810	1340	545	475	190	110	177 litres
3467 CFXXH	1900 × 900 × 450	1900	900	910	1420	618	575	200	120	224 litres

*bath capacity = volume + 70 litres human water displacement.

Dimensions

PG	article no.	dimensions in mm	weight (net)	White 000 → cover	coloured → cover
CO	3466 CFXXH	1800 × 800 × 450	83.5 kg	4.817 €	5.584 €
CO	3467 CFXXH	1900 × 900 × 450	93 kg	5.255 €	6.022 €

Please note the ordering information on page 5.

Extras

PG	code	description	see	price
EX	AS	BetteAnti-Slip Sense*	p. 273	190 €
EX	PLUS	BetteGlaze® Plus	p. 274	160 €
IN		Whirlsystems	p. 378	

*Not available with Glaze® Plus. Only available in combination with White (000).

Accessories

PG	article no.	description	see	price
IN	B50-0015	Height-adjustable feet (4 pieces)	p. 343	49 €

Waste- and overflow fittings

PG	article no.	description	see	Chrome 901	White 000
IN	B602-	Waste- and overflow fitting Ø 52 mm, 725 mm	p. 314	154 €	177 €
IN	B606-	Waste, overflow and filling unit Ø 52 mm, 725 mm	p. 318	423 €	514 €
IN	B619-	Waste- and overflow fitting Plus 5, Ø 52 mm, 1070 mm	p. 325	267 €	
IN	B620-	Waste, overflow and filling unit Plus 5, Ø 52 mm, 1070 mm	p. 330	529 €	

Technical information and prices of additional BetteExtras on page 270. You will find the colours in the cover. Subject to alteration and production tolerance. Prices excluding VAT.

BetteLux Oval Silhouette

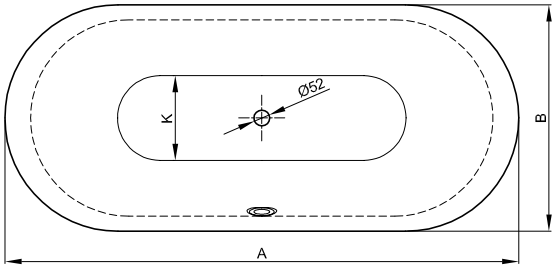

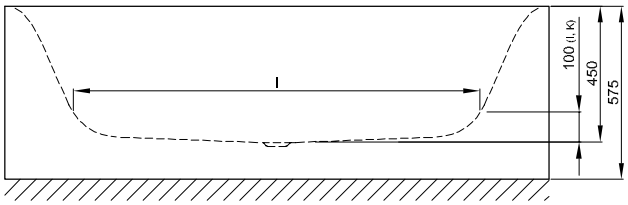

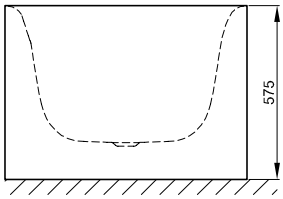

Information

If this bath is ordered with waste fitting this will come prefitted. If ordered with Trio waste the bath comes with prefitted Sanfix tube for water supply. A flexible drain pipe is generally included in delivery.

If combined with BetteWhirlsystems it is necessary to provide an adequate air supply under the bath.

Available with matching washbasin BetteLux Oval. → p. 262

Scope of delivery

Including noise-reducing pads.

Design: Tesseraux + Partner

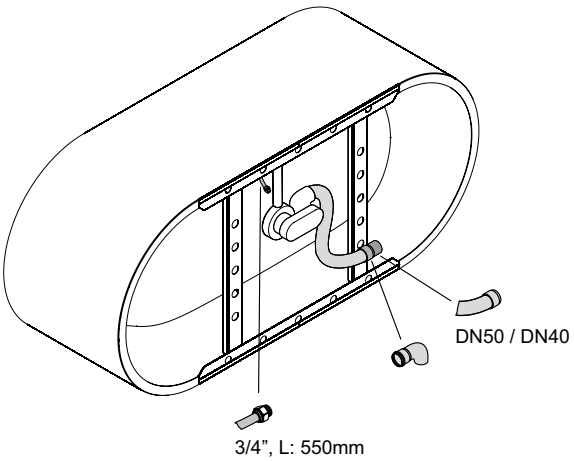

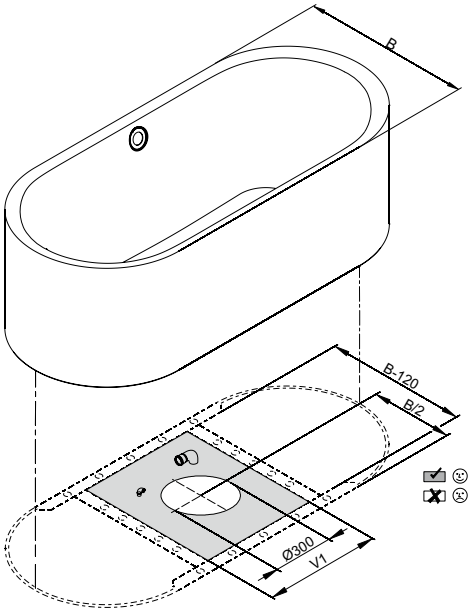

Adequate position to connect the drainage

Dimensions

article no.	dimensions in mm	A	B	I	K	V1	volume*
3465 CFXXS	1700 × 750 × 450	1700	750	1270	515	500	150 litres
3466 CFXXS	1800 × 800 × 450	1800	800	1340	545	550	177 litres
3467 CFXXS	1900 × 900 × 450	1900	900	1420	618	650	224 litres

*bath capacity = volume + 70 litres human water displacement.

Dimensions

PG	article no.	dimensions in mm	weight (net)	White 000 → cover	coloured → cover	Bicolour → cover
CO	3465 CFXXS	1700 × 750 × 450	111 kg	5.007 €	5.774 €	7.249 €
CO	3466 CFXXS	1800 × 800 × 450	118 kg	5.507 €	6.274 €	7.749 €
CO	3467 CFXXS	1900 × 900 × 450	124 kg	6.008 €	6.775 €	8.250 €

Please note the ordering information on page 5.

Extras

PG	code	description	see	price
EX	AS	BetteAnti-Slip Sense*	p. 273	190 €
EX	PLUS	BetteGlaze® Plus	p. 274	160 €
IN		Whirlsystems	p. 378	

*Not available with Glaze® Plus. Only available in combination with White (000).

Waste- and overflow fittings

PG	article no.	description	see	Chrome 901	White 000
IN	B601-	Waste- and overflow fitting Silhouette Ø 52 mm, 725 mm	p. 313	214 €	245 €
IN	B605-	Waste, overflow and filling unit Silhouette Ø 52 mm, 725 mm	p. 317	606 €	692 €
IN	B625-	Waste- and overflow fitting Plus 5 Silhouette Ø 52 mm, 1070 mm	p. 327	346 €	
IN	B626-	Waste, overflow and filling unit Plus 5 Silhouette Ø 52 mm, 1070 mm	p. 332	731 €	

Technical information and prices of additional BetteExtras on page 270. You will find the colours in the cover. Subject to alteration and production tolerance. Prices excluding VAT.

BetteLux Oval I Silhouette

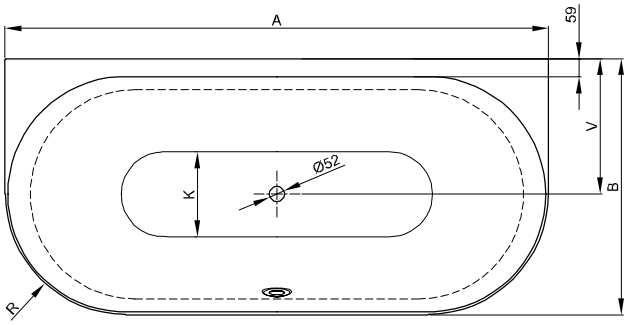

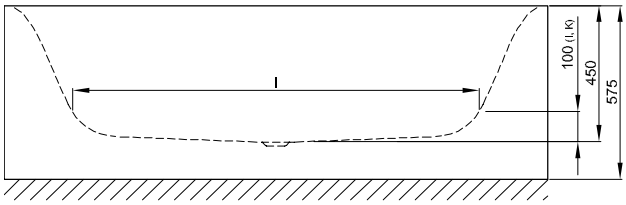

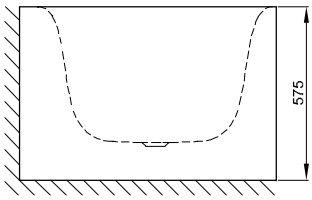

Information

If this bath is ordered with waste fitting this will come prefitted. If ordered with Trio waste the bath comes with prefitted Sanfix tube for water supply. A flexible drain pipe is generally included in delivery.

If combined with BetteWhirlsystems it is necessary to provide an adequate air supply under the bath.

Available with matching washbasin BetteLux Oval. → p. 262

Scope of delivery

Including noise-reducing pads.

Design: Tesseraux + Partner

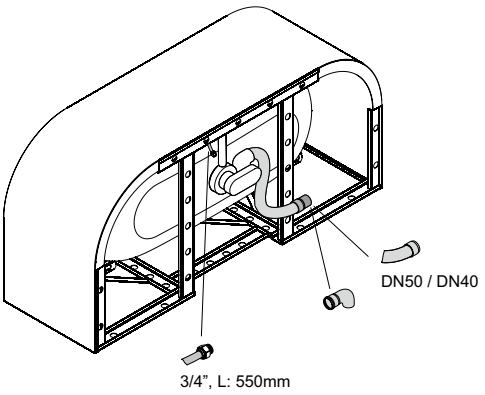

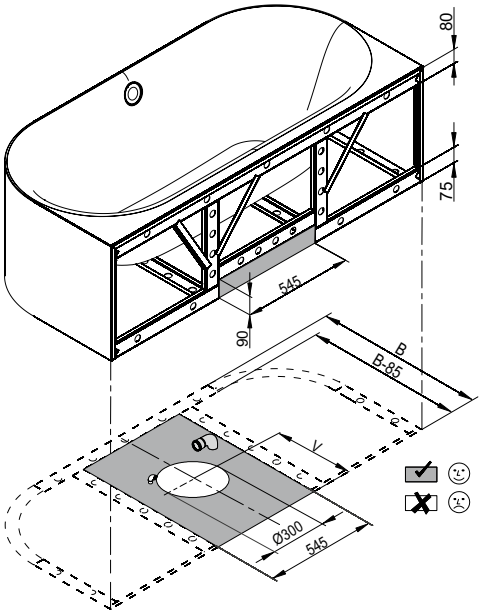

Adequate position to connect the drainage

Dimensions

article no.	dimensions in mm	A	B	I	K	R	V	volume*
3415 CWVVS	1700 × 800 × 450	1700	800	1270	515	375	425	150 litres
3416 CWVVS	1800 × 850 × 450	1800	850	1340	545	400	450	177 litres
3417 CWVVS	1900 × 950 × 450	1900	950	1420	618	450	500	224 litres

*bath capacity = volume + 70 litres human water displacement.

Dimensions

PG	article no.	dimensions in mm	weight (net)	White 000 → cover	coloured → cover
CO	3415 CWVVS	1700 × 800 × 450	80 kg	4.860 €	5.627 €
CO	3416 CWVVS	1800 × 850 × 450	90 kg	5.346 €	6.113 €
CO	3417 CWVVS	1900 × 950 × 450	100 kg	5.831 €	6.598 €

Please note the ordering information on page 5.

Extras

PG	code	description	see	price
EX	AS	BetteAnti-Slip Sense*	p. 273	190 €
EX	PLUS	BetteGlaze® Plus	p. 274	160 €
EX	HLZ	Tapholes and drilling as per special drawing	p. 276	234 €
IN		Whirlsystems	p. 378	

*Not available with Glaze® Plus. Only available in combination with White (000).

Waste- and overflow fittings

PG	article no.	description	see	Chrome 901	White 000
IN	B601-	Waste- and overflow fitting Silhouette Ø 52 mm, 725 mm	p. 313	214 €	245 €
IN	B605-	Waste, overflow and filling unit Silhouette Ø 52 mm, 725 mm	p. 317	606 €	692 €
IN	B625-	Waste- and overflow fitting Plus 5 Silhouette Ø 52 mm, 1070 mm	p. 327	346 €	
IN	B626-	Waste, overflow and filling unit Plus 5 Silhouette Ø 52 mm, 1070 mm	p. 332	731 €	

Technical information and prices of additional BetteExtras on page 270. You will find the colours in the cover. Subject to alteration and production tolerance. Prices excluding VAT.

BetteLux Oval IV Silhouette

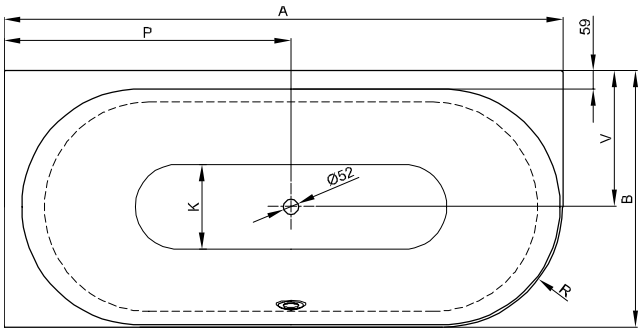

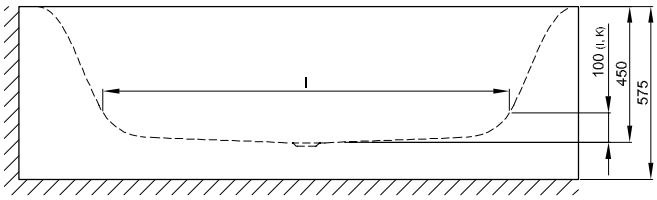

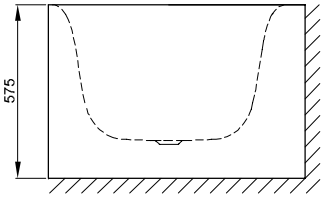

Information

If this bath is ordered with waste fitting this will come prefitted. If ordered with Trio waste the bath comes with prefitted Sanfix tube for water supply. A flexible drain pipe is generally included in delivery.

If combined with BetteWhirlsystems it is necessary to provide an adequate air supply under the bath.

Available with matching washbasin BetteLux Oval. → p. 262

Scope of delivery

Including noise-reducing pads.

Design: Tesseraux + Partner

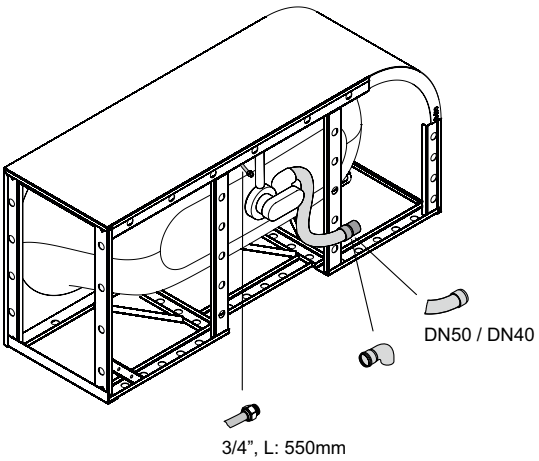

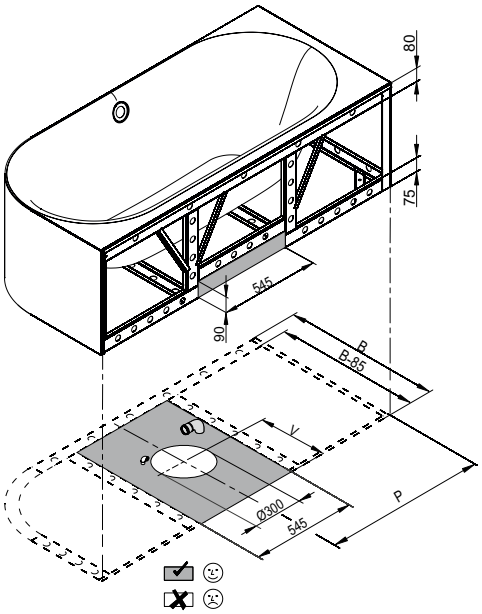

Dimensions

article no.	dimensions in mm	A	B	I	K	P	R	V	volume*
3425 CERVS	1750 × 800 × 450	1750	800	1270	515	900	375	425	150 litres
3426 CERVS	1850 × 850 × 450	1850	850	1340	545	950	400	450	177 litres
3427 CERVS	1950 × 950 × 450	1950	950	1420	618	1000	450	500	224 litres

*bath capacity = volume + 70 litres human water displacement.

Dimensions

PG	article no.	dimensions in mm	weight (net)	White 000 → cover	coloured → cover
CO	3425 CERVS	1750 × 800 × 450	84 kg	4.639 €	5.406 €
CO	3426 CERVS	1850 × 850 × 450	93 kg	4.860 €	5.627 €
CO	3427 CERVS	1950 × 950 × 450	102 kg	5.301 €	6.068 €

Please note the ordering information on page 5.

Extras

PG	code	description	see	price
EX	AS	BetteAnti-Slip Sense*	p. 273	190 €
EX	PLUS	BetteGlaze® Plus	p. 274	160 €
EX	HLZ	Tapholes and drilling as per special drawing	p. 276	234 €
IN		Whirlsystems	p. 378	

*Not available with Glaze® Plus. Only available in combination with White (000).

Waste- and overflow fittings

PG	article no.	description	see	Chrome 901	White 000
IN	B601-	Waste- and overflow fitting Silhouette Ø 52 mm, 725 mm	p. 313	214 €	245 €
IN	B605-	Waste, overflow and filling unit Silhouette Ø 52 mm, 725 mm	p. 317	606 €	692 €
IN	B625-	Waste- and overflow fitting Plus 5 Silhouette Ø 52 mm, 1070 mm	p. 327	346 €	
IN	B626-	Waste, overflow and filling unit Plus 5 Silhouette Ø 52 mm, 1070 mm	p. 332	731 €	

Technical information and prices of additional BetteExtras on page 270. You will find the colours in the cover. Subject to alteration and production tolerance. Prices excluding VAT.

BetteLux Oval V Silhouette

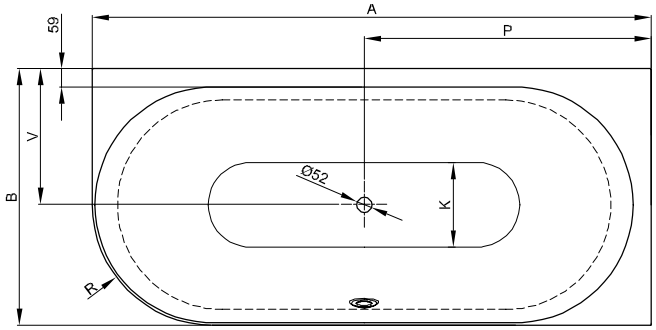

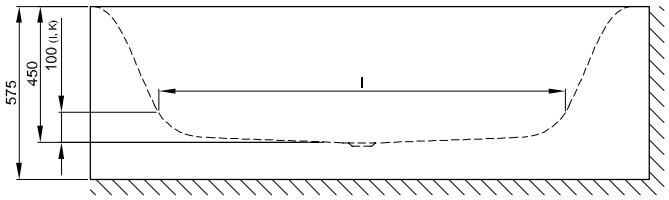

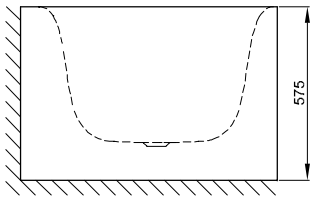

Information

If this bath is ordered with waste fitting this will come prefitted. If ordered with Trio waste the bath comes with prefitted Sanfix tube for water supply. A flexible drain pipe is generally included in delivery.

If combined with BetteWhirlsystems it is necessary to provide an adequate air supply under the bath.

Available with matching washbasin BetteLux Oval. → p. 262

Scope of delivery

Including noise-reducing pads.

Design: Tesseraux + Partner

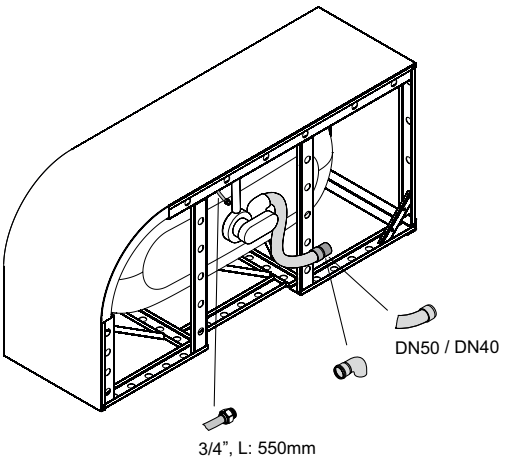

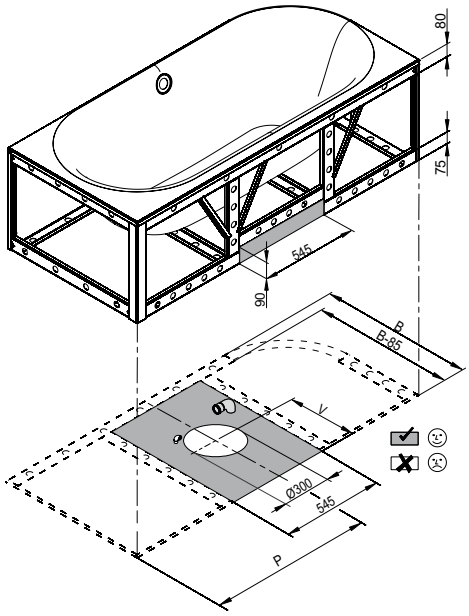

Dimensions

article no.	dimensions in mm	A	B	I	K	P	R	V	volume*
3435 CELVS	1750 × 800 × 450	1750	800	1270	515	900	375	425	150 litres
3436 CELVS	1850 × 850 × 450	1850	850	1340	545	950	400	450	177 litres
3437 CELVS	1950 × 950 × 450	1950	950	1420	618	1000	450	500	224 litres

*bath capacity = volume + 70 litres human water displacement.

Dimensions

PG	article no.	dimensions in mm	weight (net)	White 000 → cover	coloured → cover
CO	3435 CELVS	1750 × 800 × 450	84 kg	4.639 €	5.406 €
CO	3436 CELVS	1850 × 850 × 450	90 kg	4.860 €	5.627 €
CO	3437 CELVS	1950 × 950 × 450	119 kg	5.301 €	6.068 €

Please note the ordering information on page 5.

Extras

PG	code	description	see	price
EX	AS	BetteAnti-Slip Sense*	p. 273	190 €
EX	PLUS	BetteGlaze® Plus	p. 274	160 €
EX	HLZ	Tapholes and drilling as per special drawing	p. 276	234 €
IN		Whirlsystems	p. 378	

*Not available with Glaze® Plus. Only available in combination with White (000).

Waste- and overflow fittings

PG	article no.	description	see	Chrome 901	White 000
IN	B601-	Waste- and overflow fitting Silhouette Ø 52 mm, 725 mm	p. 313	214 €	245 €
IN	B605-	Waste, overflow and filling unit Silhouette Ø 52 mm, 725 mm	p. 317	606 €	692 €
IN	B625-	Waste- and overflow fitting Plus 5 Silhouette Ø 52 mm, 1070 mm	p. 327	346 €	
IN	B626-	Waste, overflow and filling unit Plus 5 Silhouette Ø 52 mm, 1070 mm	p. 332	731 €	

Technical information and prices of additional BetteExtras on page 270. You will find the colours in the cover. Subject to alteration and production tolerance. Prices excluding VAT.

BetteMetric

N° 1: foot end right, overflow front

N° 2: foot end left, overflow front

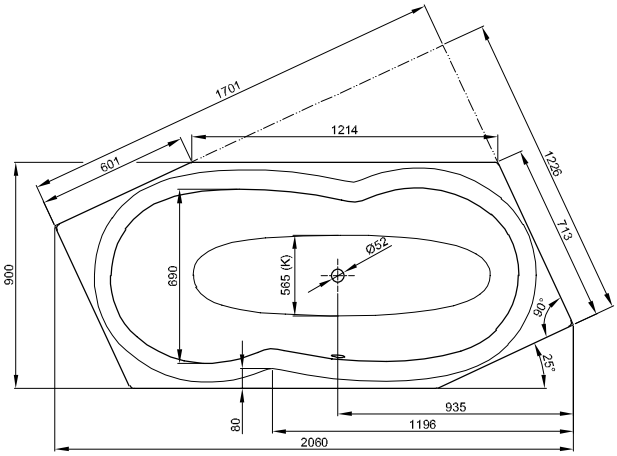

N° 1: foot end right, overflow front, article no. 6840

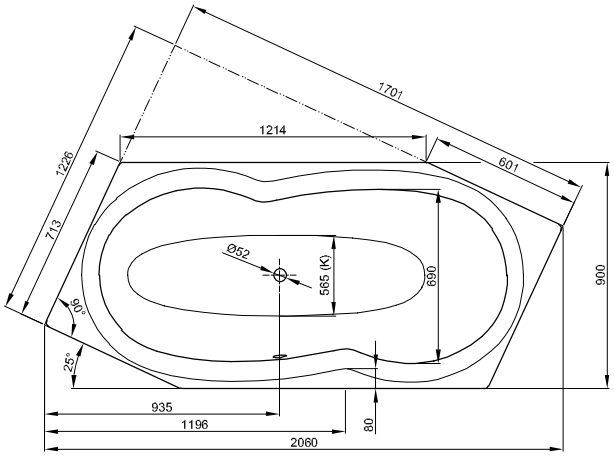

N° 2: foot end left, overflow front, article no. 6841

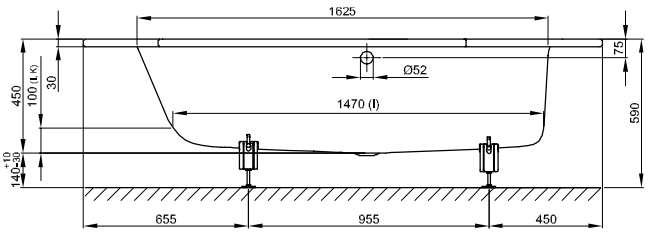

Information

For professional installation we recommend the use of the original bath feet B23-1525.

Scope of delivery

Including noise-reducing pads.

Design: schmiddem design

Dimensions

article no.	dimensions in mm	variant	volume*
6840	2060 × 900 × 450	№ 1	190 litres
6841	2060 × 900 × 450	№ 2	190 litres

*bath capacity = volume + 70 litres human water displacement.

Dimensions

PG	article no.	dimensions in mm	variant	weight (net)	White 000 → cover	coloured → cover
CO	6840	2060 × 900 × 450	№ 1	61 kg	2.140 €	2.318 €
CO	6841	2060 × 900 × 450	№ 2	61 kg	2.140 €	2.318 €

Extras

PG	code	description	see	price
EX	AS	BetteAnti-Slip Sense*	p. 273	190 €
EX	PLUS	BetteGlaze® Plus	p. 274	160 €
EX	HLZ	Tapholes and drilling as per special drawing	p. 276	234 €
IN		Whirlsystems	p. 378	

*Not available with Glaze® Plus. Only available in combination with White (000).

Accessories

PG	article no.	description	see	price
IN	B23-1525	Bath feet, oval	p. 342	88 €
IN	B57-0407	Bath divider 3300 × 120 mm	p. 359	33 €
IN	Z0008669	Wall Brackets	p. 360	40 €

Waste- and overflow fittings

PG	article no.	description	see	Chrome 901	White 000
IN	B602-	Waste- and overflow fitting Ø 52 mm, 725 mm	p. 314	154 €	177 €
IN	B606-	Waste, overflow and filling unit Ø 52 mm, 725 mm	p. 318	423 €	514 €
IN	B619-	Waste- and overflow fitting Plus 5, Ø 52 mm, 1070 mm	p. 325	267 €	
IN	B620-	Waste, overflow and filling unit Plus 5, Ø 52 mm, 1070 mm	p. 330	529 €	

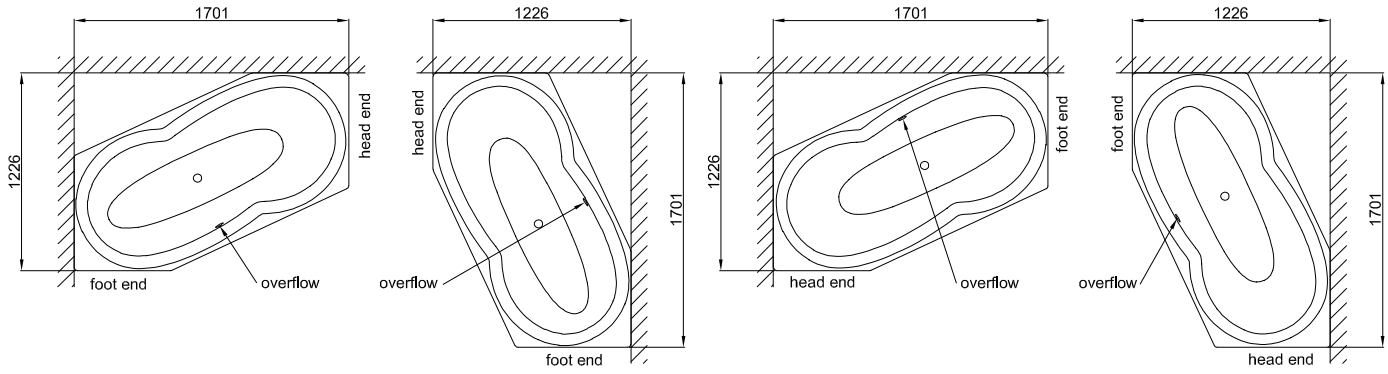

Article no. 6840

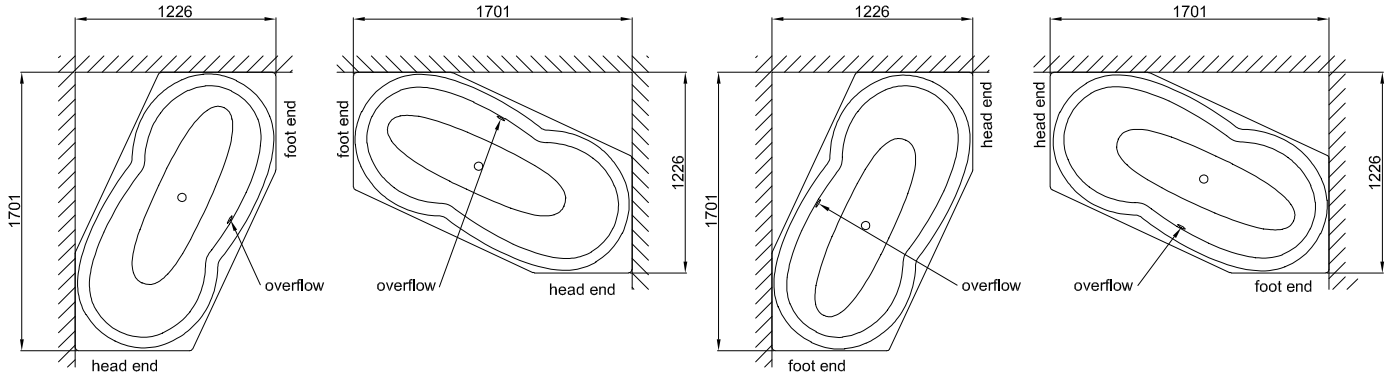

Article no. 6841

Technical information and prices of additional BetteExtras on page 270. You will find the colours in the cover. Subject to alteration and production tolerance. Prices excluding VAT.

BetteOcean

N° 1: foot end right, overflow rear

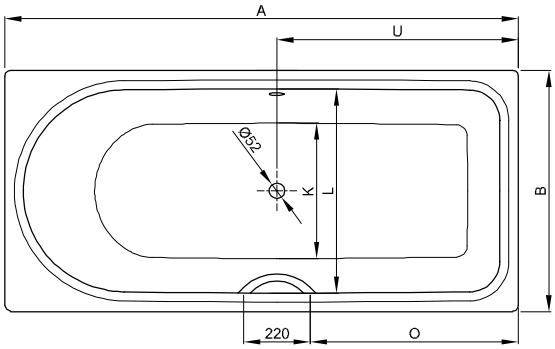

N° 1: foot end right, overflow rear

N° 2: foot end right, overflow front

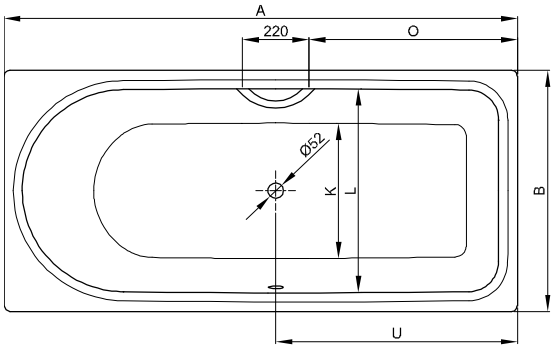

N° 2: foot end right, overflow front

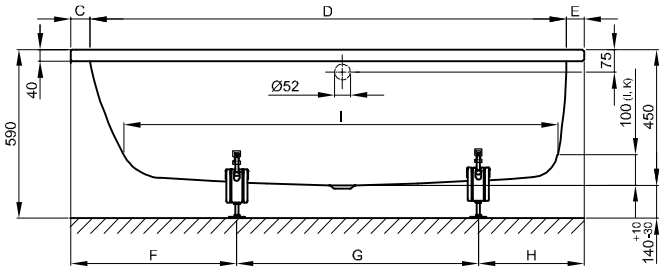

Information

For professional installation we recommend the use of the original bath feet B23-1500.

If the bath is to be fitted under a panel, please contact us for individual cut-out details.

Scope of delivery

Including noise-reducing pads.

Design: schmiddem design

Dimensions

article no.	dimensions in mm	variant	A	B	C	D	E	F	G	H	I	K	L	O	U	volume*
8858	1500 × 700 × 450	№ 1	1500	700	65	1375	60	470	700	330	1235	505	565	540	650	139 litres
8859	1500 × 700 × 450	№ 2	1500	700	65	1375	60	470	700	330	1235	505	565	540	650	139 litres
8850	1600 × 700 × 450	№ 1	1600	700	65	1475	60	470	760	370	1335	505	565	590	700	148 litres
8851	1600 × 700 × 450	№ 2	1600	700	65	1475	60	470	760	370	1335	505	565	590	700	148 litres
8852	1700 × 700 × 450	№ 1	1700	700	115	1475	110	520	760	420	1335	505	565	640	750	148 litres
8853	1700 × 700 × 450	№ 2	1700	700	115	1475	110	520	760	420	1335	505	565	640	750	148 litres
8854	1700 × 750 × 450	№ 1	1700	750	65	1575	60	490	890	320	1435	555	615	690	800	185 litres
8855	1700 × 750 × 450	№ 2	1700	750	65	1575	60	490	890	320	1435	555	615	690	800	185 litres
8765	1700 × 800 × 450	№ 1	1700	800	65	1575	60	540	800	360	1435	605	665	690	800	202 litres
8865	1700 × 800 × 450	№ 2	1700	800	65	1575	60	540	800	360	1435	605	665	690	800	202 litres
8856	1800 × 800 × 450	№ 1	1800	800	65	1675	60	540	900	360	1535	605	665	690	800	235 litres
8857	1800 × 800 × 450	№ 2	1800	800	65	1675	60	540	900	360	1535	605	665	690	800	235 litres

*bath capacity = volume + 70 litres human water displacement.

Dimensions

PG	article no.	dimensions in mm	variant	weight (net)	pcs/pallet	White 000 → cover	coloured → cover
CO	8858	1500 × 700 × 450	№ 1	53 kg	10	1.078 €	1.256 €
CO	8859	1500 × 700 × 450	№ 2	53 kg	10	1.078 €	1.256 €
CO	8850	1600 × 700 × 450	№ 1	54 kg	10	1.078 €	1.256 €
CO	8851	1600 × 700 × 450	№ 2	54 kg	10	1.078 €	1.256 €
CO	8852	1700 × 700 × 450	№ 1	55 kg	10	1.078 €	1.256 €
CO	8853	1700 × 700 × 450	№ 2	55 kg	10	1.078 €	1.256 €
CO	8854	1700 × 750 × 450	№ 1	59 kg	10	1.078 € ☗	1.256 €
CO	8855	1700 × 750 × 450	№ 2	59 kg	10	1.078 € ☗	1.256 €
CO	8765	1700 × 800 × 450	№ 1	57 kg	10	1.078 € ☗	1.256 €
CO	8865	1700 × 800 × 450	№ 2	57 kg	10	1.078 € ☗	1.256 €
CO	8856	1800 × 800 × 450	№ 1	64 kg	8	1.186 € ☗	1.364 €
CO	8857	1800 × 800 × 450	№ 2	64 kg	8	1.186 € ☗	1.364 €

Extras

PG	code	description	see	price
EX	AS	BetteAnti-Slip Sense*	p. 273	190 €
EX	PLUS	BetteGlaze® Plus	p. 274	160 €
EX	HLZ	Tapholes and drilling as per special drawing	p. 276	234 €
EX		BetteUpstand	p. 280	from 424 €
EX		Special size	p. 286	404 €
EX		Profi Corner	p. 284	from 404 €
IN		Whirlsystems	p. 378	

*Not available with Glaze® Plus. Only available in combination with White (000).

Accessories

PG	article no.	description	see	price
IN	B23-1500	Bath feet universal	p. 342	75 €
IN	B090-901	Grip B090, chrome*	p. 367	178 €
IN	B120-901	Grip B120, chrome*	p. 368	178 €
IN	B57-0372	Sealing System for baths	p. 356	106 €
IN	B57-0407	Bath divider 3300 × 120 mm	p. 359	33 €
IN	Z0008669	Wall Brackets	p. 360	40 €

* The baths need to be ordered with the ending 1GR.

Waste- and overflow fittings

PG	article no.	description	see	Chrome 901	White 000
IN	B602-	Waste- and overflow fitting Ø 52 mm, 725 mm	p. 314	154 €	177 €
IN	B606-	Waste, overflow and filling unit Ø 52 mm, 725 mm	p. 318	423 €	514 €
IN	B619-	Waste- and overflow fitting Plus 5, Ø 52 mm, 1070 mm	p. 325	267 €	
IN	B620-	Waste, overflow and filling unit Plus 5, Ø 52 mm, 1070 mm	p. 330	529 €	

Technical information and prices of additional BetteExtras on page 270. You will find the colours in the cover. Subject to alteration and production tolerance. Prices excluding VAT.

BetteOcean Low-Line

N° 1: foot end right, overflow rear

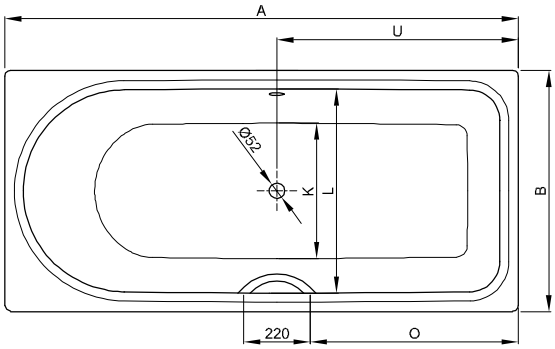

N° 1: foot end right, overflow rear

N° 2: foot end right, overflow front

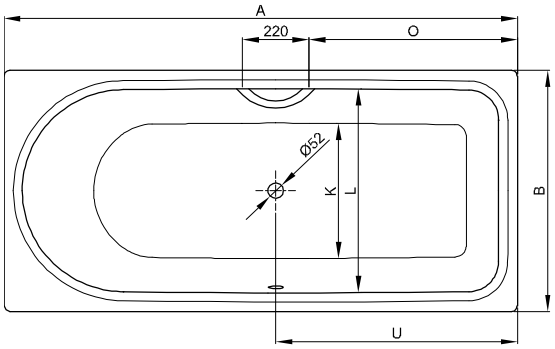

N° 2: foot end right, overflow front

Information

For professional installation we recommend the use of the original bath feet B23-1500.

If the bath is to be fitted under a panel, please contact us for individual cut-out details.

Scope of delivery

Including noise-reducing pads.

Design: schmiddem design

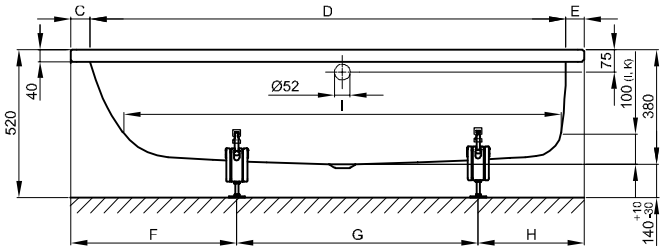

Dimensions

article no.	dimensions in mm	variant	A	B	C	D	E	F	G	H	I	K	L	O	U	volume*
8841	1500 × 700 × 380	№ 1	1500	700	60	1375	65	470	700	330	1235	505	565	540	650	90 litres
8842	1500 × 700 × 380	№ 2	1500	700	60	1375	65	470	700	330	1235	505	565	540	650	90 litres
8830	1600 × 700 × 380	№ 1	1600	700	65	1475	60	470	760	370	1335	505	565	590	700	120 litres
8831	1600 × 700 × 380	№ 2	1600	700	65	1475	60	470	760	370	1335	505	565	590	700	120 litres
8832	1700 × 700 × 380	№ 1	1700	700	115	1475	110	500	880	320	1335	505	565	640	750	120 litres
8833	1700 × 700 × 380	№ 2	1700	700	115	1475	110	500	880	320	1335	505	565	640	750	120 litres
8834	1700 × 750 × 380	№ 1	1700	750	65	1575	60	500	880	320	1435	555	615	690	800	140 litres
8835	1700 × 750 × 380	№ 2	1700	750	65	1575	60	500	880	320	1435	555	615	690	800	140 litres
8836	1700 × 800 × 380	№ 1	1700	800	65	1575	60	540	800	360	1435	605	665	690	800	165 litres
8837	1700 × 800 × 380	№ 2	1700	800	65	1575	60	540	800	360	1435	605	665	690	800	165 litres
8838	1800 × 800 × 380	№ 1	1800	800	65	1675	60	540	900	360	1535	605	665	690	800	180 litres
8839	1800 × 800 × 380	№ 2	1800	800	65	1675	60	540	900	360	1535	605	665	690	800	180 litres

*bath capacity = volume + 70 litres human water displacement.

Dimensions

PG	article no.	dimensions in mm	variant	weight (net)	pcs/pallet	White 000 → cover	coloured → cover
CO	8841	1500 × 700 × 380	№ 1	47 kg	10	1.078 €	1.256 €
CO	8842	1500 × 700 × 380	№ 2	47 kg	10	1.078 €	1.256 €
CO	8830	1600 × 700 × 380	№ 1	49 kg	10	1.078 €	1.256 €
CO	8831	1600 × 700 × 380	№ 2	49 kg	10	1.078 €	1.256 €
CO	8832	1700 × 700 × 380	№ 1	51 kg	10	1.078 €	1.256 €
CO	8833	1700 × 700 × 380	№ 2	51 kg	10	1.078 €	1.256 €
CO	8834	1700 × 750 × 380	№ 1	54 kg	10	1.078 €	1.256 €
CO	8835	1700 × 750 × 380	№ 2	54 kg	10	1.078 €	1.256 €
CO	8836	1700 × 800 × 380	№ 1	53 kg	10	1.078 €	1.256 €
CO	8837	1700 × 800 × 380	№ 2	53 kg	10	1.078 €	1.256 €
CO	8838	1800 × 800 × 380	№ 1	60 kg	10	1.186 €	1.364 €
CO	8839	1800 × 800 × 380	№ 2	60 kg	10	1.186 €	1.364 €

Extras

PG	code	description	see	price
EX	AS	BetteAnti-Slip Sense*	p. 273	190 €
EX	PLUS	BetteGlaze® Plus	p. 274	160 €
EX	HLZ	Tapholes and drilling as per special drawing	p. 276	234 €
EX		BetteUpstand	p. 280	from 424 €
EX		Profi Corner	p. 284	from 404 €
IN		Whirlsystems	p. 378	

*Not available with Glaze® Plus. Only available in combination with White (000).

Accessories

PG	article no.	description	see	price
IN	B23-1500	Bath feet universal	p. 342	75 €
IN	B090-901	Grip B090, chrome*	p. 367	178 €
IN	B120-901	Grip B120, chrome*	p. 368	178 €
IN	B57-0372	Sealing System for baths	p. 356	106 €
IN	B57-0407	Bath divider 3300 × 120 mm	p. 359	33 €
IN	Z0008669	Wall Brackets	p. 360	40 €

* The baths need to be ordered with the ending 1GR.

Waste- and overflow fittings

PG	article no.	description	see	Chrome 901	White 000
IN	B602-	Waste- and overflow fitting Ø 52 mm, 725 mm	p. 314	154 €	177 €
IN	B606-	Waste, overflow and filling unit Ø 52 mm, 725 mm	p. 318	423 €	514 €
IN	B619-	Waste- and overflow fitting Plus 5, Ø 52 mm, 1070 mm	p. 325	267 €	
IN	B620-	Waste, overflow and filling unit Plus 5, Ø 52 mm, 1070 mm	p. 330	529 €	

Technical information and prices of additional BetteExtras on page 270. You will find the colours in the cover. Subject to alteration and production tolerance. Prices excluding VAT.

BetteOne

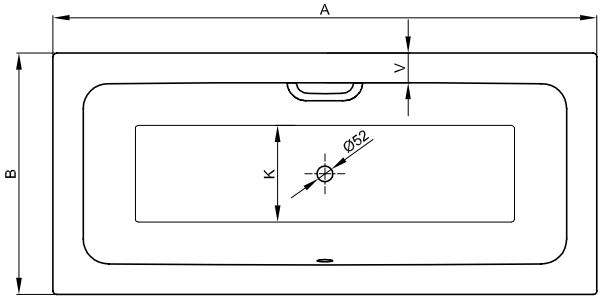

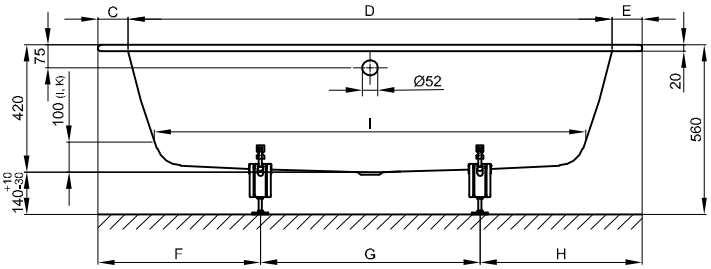

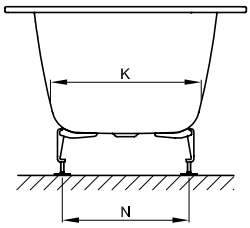

Information

The BetteOne, 1900 x 900 x 420 mm, article no. 3314, is not available with BetteUpstands or in special size.

For professional installation we recommend the use of the original bath feet B23-1500.

If the bath is to be fitted under a panel, please contact us for individual cut-out details.

Available with matching washbasin BetteOne. → p. 266

Scope of delivery

Including noise-reducing pads.

Design: Tesseraux + Partner

Dimensions

article no.	dimensions in mm	A	B	C	D	E	F	G	H	I	K	N	V	volume*
3310	1600 × 700 × 420	1600	700	90	1420	90	360	880	360	1250	415	345	85	100 litres
3311	1700 × 700 × 420	1700	700	90	1520	90	375	950	375	1340	415	345	90	112 litres
3312	1700 × 750 × 420	1700	750	95	1510	95	375	950	375	1340	455	385	95	129 litres
3313	1800 × 800 × 420	1800	800	100	1600	100	370	1060	370	1420	495	425	100	158 litres
3314	1900 × 900 × 420	1900	900	105	1690	105	400	1100	400	1515	595	525	100	217 litres

*bath capacity = volume + 70 litres human water displacement.

Dimensions

PG	article no.	dimensions in mm	weight (net)	pcs/pallet	White 000 → cover	coloured → cover
CO	3310	1600 × 700 × 420	43 kg	14	1.024 € ☗	1.202 €
CO	3311	1700 × 700 × 420	45 kg	14	1.024 €	1.202 €
CO	3312	1700 × 750 × 420	49 kg	14	1.024 € ☗	1.202 €
CO	3313	1800 × 800 × 420	51.8 kg	14	1.127 € ☗	1.305 €
CO	3314	1900 × 900 × 420	63 kg	14	1.273 € ☗	1.451 €

Extras

PG	code	description	see	price
EX	AS	BetteAnti-Slip Sense*	p. 273	190 €
EX	PLUS	BetteGlaze® Plus	p. 274	160 €
EX	HLZ	Tapholes and drilling as per special drawing	p. 276	234 €
EX		BetteUpstand	p. 280	from 424 €
EX		Special size	p. 286	404 €
EX		Profi Corner	p. 284	from 404 €
IN		Whirlsystems	p. 378	

*Not available with Glaze® Plus. Only available in combination with White (000).

Accessories

PG	article no.	description	see	price
IN	B23-1500	Bath feet universal	p. 342	75 €
IN	B090-901	Grip B090, chrome*	p. 367	178 €
IN	B120-901	Grip B120, chrome*	p. 368	178 €
IN	B57-0372	Sealing System for baths	p. 356	106 €
IN	B57-0407	Bath divider 3300 × 120 mm	p. 359	33 €
IN	Z0008669	Wall Brackets	p. 360	40 €

* The baths need to be ordered with the ending 1GR.

Waste- and overflow fittings

PG	article no.	description	see	Chrome 901	White 000
IN	B602-	Waste- and overflow fitting Ø 52 mm, 725 mm	p. 314	154 €	177 €
IN	B606-	Waste, overflow and filling unit Ø 52 mm, 725 mm	p. 318	423 €	514 €
IN	B619-	Waste- and overflow fitting Plus 5, Ø 52 mm, 1070 mm	p. 325	267 €	
IN	B620-	Waste, overflow and filling unit Plus 5, Ø 52 mm, 1070 mm	p. 330	529 €	

Technical information and prices of additional BetteExtras on page 270. You will find the colours in the cover. Subject to alteration and production tolerance. Prices excluding VAT.

BetteOne Relax

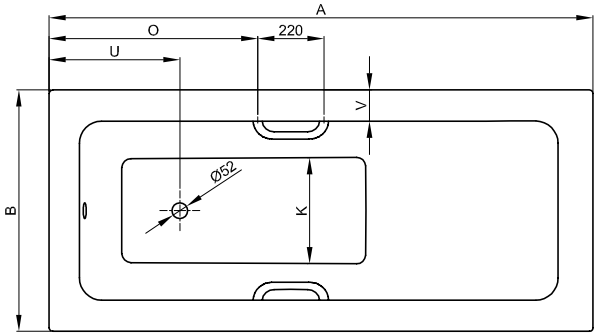

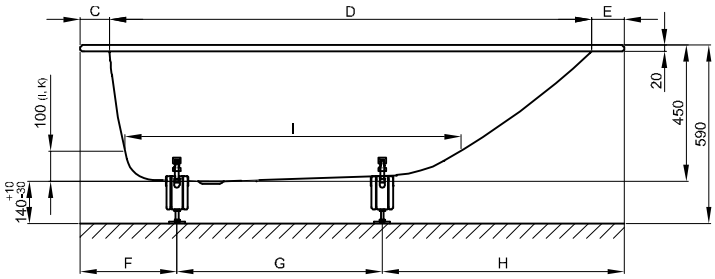

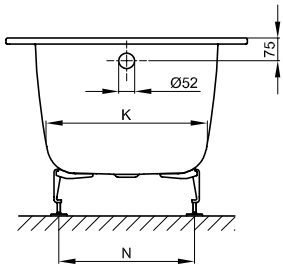

Information

The BetteOne Relax, 1900 × 900 × 450 mm, article no. 3324 and 2000 × 900 × 450 mm, article no. 3325, are not available with BetteUpstands or in special size.

For professional installation we recommend the use of the original bath feet B23-1500.

If the bath is to be fitted under a panel, please contact us for individual cut-out details.

Available with matching washbasin BetteOne. → p. 266

Scope of delivery

Including noise-reducing pads.

Design: Tesseraux + Partner

Dimensions

article no.	dimensions in mm	A	B	C	D	E	F	G	H	I	K	N	O	U	V	volume*
3323	1800 × 800 × 450	1800	800	95	1600	105	360	645	795	1080	515	455	690	433	100	155 litres
3324	1900 × 900 × 450	1900	900	100	1690	110	320	780	800	1165	600	545	740	438	105	210 litres
3325	2000 × 900 × 450	2000	900	100	1790	110	320	880	800	1285	600	545	790	438	105	226 litres

*bath capacity = volume + 70 litres human water displacement.

Dimensions

PG	article no.	dimensions in mm	weight (net)	pcs/pallet	White 000 → cover	coloured → cover
CO	3323	1800 × 800 × 450	54 kg	12	1.352 € ☗	1.530 €
CO	3324	1900 × 900 × 450	61 kg	12	1.528 € ☗	1.706 €
CO	3325	2000 × 900 × 450	65 kg	12	1.712 €	1.890 €

Extras

PG	code	description	see	price
EX	AS	BetteAnti-Slip Sense*	p. 273	190 €
EX	PLUS	BetteGlaze® Plus	p. 274	160 €
EX	HLZ	Tapholes and drilling as per special drawing	p. 276	234 €
EX		BetteUpstand	p. 280	from 424 €
EX		Special size	p. 286	404 €
EX		Profi Corner	p. 284	from 404 €
IN		Whirlsystems	p. 378	

*Not available with Glaze® Plus. Only available in combination with White (000).

Accessories

PG	article no.	description	see	price
IN	B23-1500	Bath feet universal	p. 342	75 €
IN	B080-901	Grips B080, chrome*	p. 366	224 €
IN	B122-901	Grips B122, chrome*	p. 368	233 €
IN	B57-0372	Sealing System for baths	p. 356	106 €
IN	B57-0407	Bath divider 3300 × 120 mm	p. 359	33 €
IN	Z0008669	Wall Brackets	p. 360	40 €

* The baths need to be ordered with the ending 2GR.

Waste- and overflow fittings

PG	article no.	description	see	Chrome 901	White 000
IN	B602-	Waste- and overflow fitting Ø 52 mm, 725 mm	p. 314	154 €	177 €
IN	B606-	Waste, overflow and filling unit Ø 52 mm, 725 mm	p. 318	423 €	514 €
IN	B619-	Waste- and overflow fitting Plus 5, Ø 52 mm, 1070 mm	p. 325	267 €	
IN	B620-	Waste, overflow and filling unit Plus 5, Ø 52 mm, 1070 mm	p. 330	529 €	

Technical information and prices of additional BetteExtras on page 270. You will find the colours in the cover. Subject to alteration and production tolerance. Prices excluding VAT.

BettePond

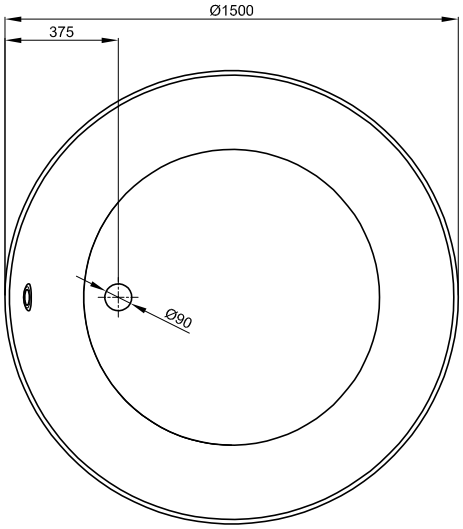

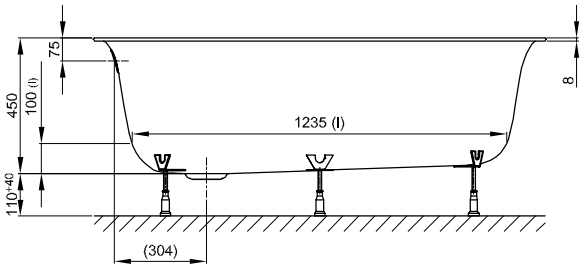

Information

For professional installation we recommend the use of the original bath feet B50-0016.

Scope of delivery

Including noise-reducing pads.

Design: Tesseraux + Partner

Dimensions

article no.	dimensions in mm	volume*
6045	1500 × 1500 × 450	342 litres

*bath capacity = volume + 70 litres human water displacement.

Dimensions

PG	article no.	dimensions in mm	weight (net)	White 000 → cover	coloured → cover
CO	6045	1500 × 1500 × 450	56 kg	3.556 €	3.734 €

Extras

PG	code	description	see	price
EX	AS	BetteAnti-Slip Sense*	p. 273	190 €
EX	PLUS	BetteGlaze® Plus	p. 274	160 €
IN		Whirlsystems	p. 378	

*Not available with Glaze® Plus. Only available in combination with White (000).

Accessories

PG	article no.	description	see	price
IN	B50-0016	Height-adjustable feet (6 pieces)	p. 343	60 €
IN	B57-0407	Bath divider 3300 × 120 mm	p. 359	33 €

Waste- and overflow fittings

PG	article no.	description	see	Chrome 901	White 000
IN	B608-	Waste- and overflow fitting Ø 90 mm, 725 mm	p. 320	232 €	245 €
IN	B611-	Waste, overflow and filling unit Ø 90 mm, 725 mm	p. 322	535 €	566 €
IN	B621-	Waste- and overflow fitting Plus 5, Ø 90 mm, 1070 mm	p. 326	287 €	
IN	B622-	Waste, overflow and filling unit Plus 5, Ø 90 mm, 1070 mm	p. 331	655 €	

Technical information and prices of additional BetteExtras on page 270. You will find the colours in the cover. Subject to alteration and production tolerance. Prices excluding VAT.

BettePond Silhouette

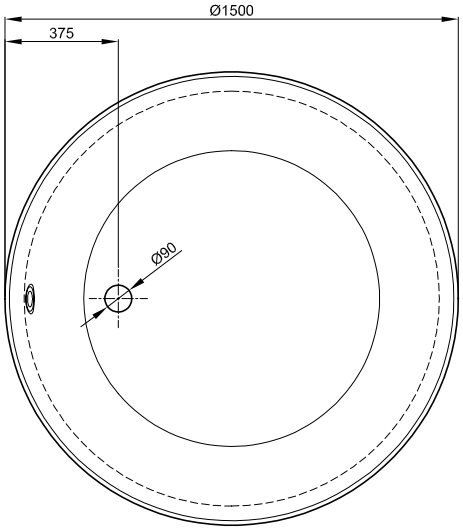

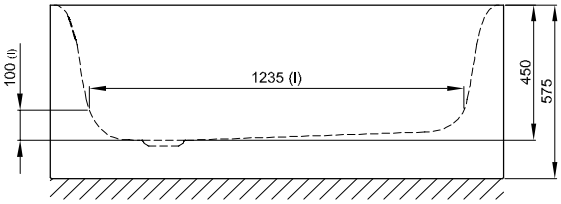

Information

If this bath is ordered with waste fitting this will come prefitted. If ordered with Trio waste the bath comes with prefitted Sanfix tube for water supply. A flexible drain pipe is generally included in delivery.

If combined with BetteWhirlsystems it is necessary to provide an adequate air supply under the bath.

Scope of delivery

Including noise-reducing pads.

Design: Tesseraux + Partner

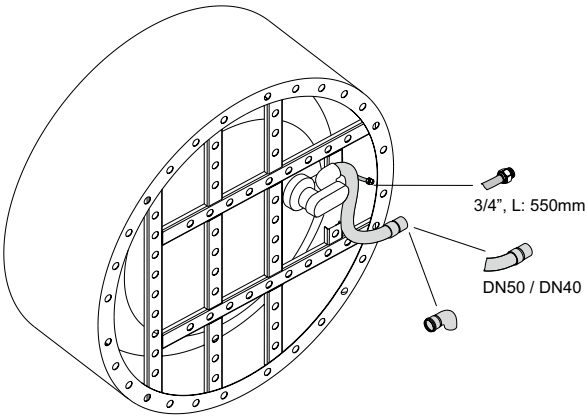

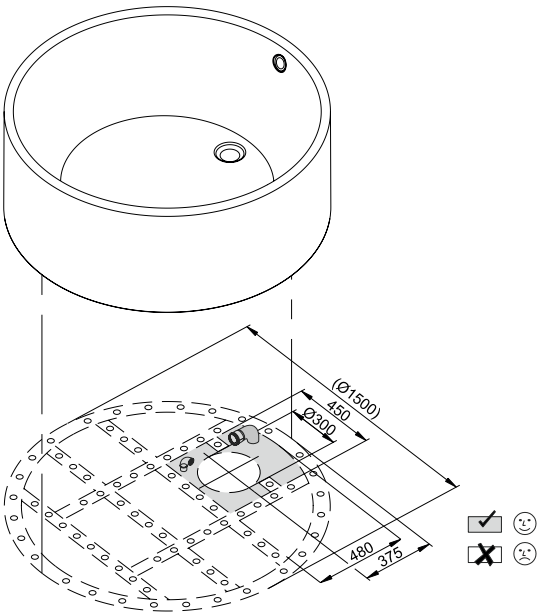

Adequate position to connect the drainage

Dimensions

article no.	dimensions in mm	volume*
6045 CFXXS	1500 × 1500 × 450	342 litres

*bath capacity = volume + 70 litres human water displacement.

Dimensions

PG	article no.	dimensions in mm	weight (net)	White 000 → cover	coloured → cover	Bicolour → cover
CO	6045 CFXXS	1500 × 1500 × 450	119 kg	6.146 €	6.913 €	8.388 €

Please note the ordering information on page 5.

Extras

PG	code	description	see	price
EX	AS	BetteAnti-Slip Sense*	p. 273	190 €
EX	PLUS	BetteGlaze® Plus	p. 274	160 €
IN		Whirlsystems	p. 378	

*Not available with Glaze® Plus. Only available in combination with White (000).

Waste- and overflow fittings

PG	article no.	description	see	Chrome 901	White 000
IN	B609-	Waste- and overflow fitting Silhouette Ø 90 mm, 725 mm	p. 321	311 €	341 €
IN	B612-	Waste, overflow and filling unit Silhouette Ø 90 mm, 725 mm	p. 323	762 €	807 €
IN	B627-	Waste- and overflow fitting Plus 5 Silhouette Ø 90 mm, 1070 mm	p. 328	383 €	
IN	B628-	Waste, overflow and filling unit Plus 5 Silhouette, Ø 90 mm, 1070 mm	p. 333	940 €	

Technical information and prices of additional BetteExtras on page 270. You will find the colours in the cover. Subject to alteration and production tolerance. Prices excluding VAT.

BettePool Oval

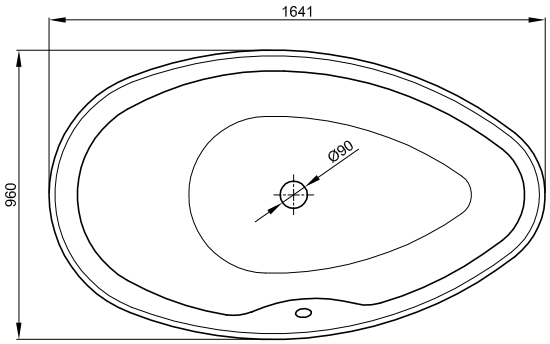

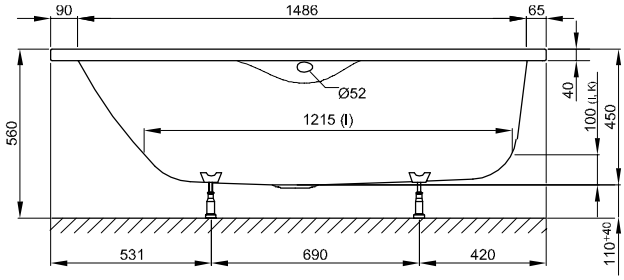

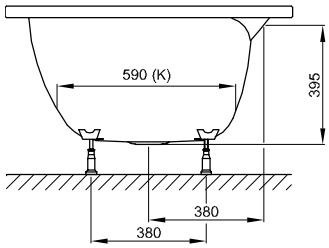

Information

Increased water level due to angled overflow.

For professional installation we recommend the use of the original bath feet B50-0015.

If the bath is to be fitted under a panel, please contact us for individual cut-out details.

Scope of delivery

Including noise-reducing pads.

Design: schmiddem design

Dimensions

article no.	dimensions in mm	volume*
6050	1641 × 960 × 450	174 litres

*bath capacity = volume + 70 litres human water displacement.

Dimensions

PG	article no.	dimensions in mm	weight (net)	White 000 → cover	coloured → cover
CO	6050	1641 × 960 × 450	43 kg	1.680 €	1.858 €

Extras

PG	code	description	see	price
EX	AS	BetteAnti-Slip Sense*	p. 273	190 €
EX	PLUS	BetteGlaze® Plus	p. 274	160 €
IN		Whirlsystems	p. 378	

*Not available with Glaze® Plus. Only available in combination with White (000).

Accessories

PG	article no.	description	see	price
IN	B50-0015	Height-adjustable feet (4 pieces)	p. 343	49 €
IN	B57-0407	Bath divider 3300 × 120 mm	p. 359	33 €

Waste- and overflow fittings

PG	article no.	description	see	Chrome 901	White 000
IN	B608-	Waste- and overflow fitting Ø 90 mm, 725 mm	p. 320	232 €	245 €
IN	B611-	Waste, overflow and filling unit Ø 90 mm, 725 mm	p. 322	535 €	566 €

Technical information and prices of additional BetteExtras on page 270. You will find the colours in the cover. Subject to alteration and production tolerance. Prices excluding VAT.

BettePool I

N° 1: corner left

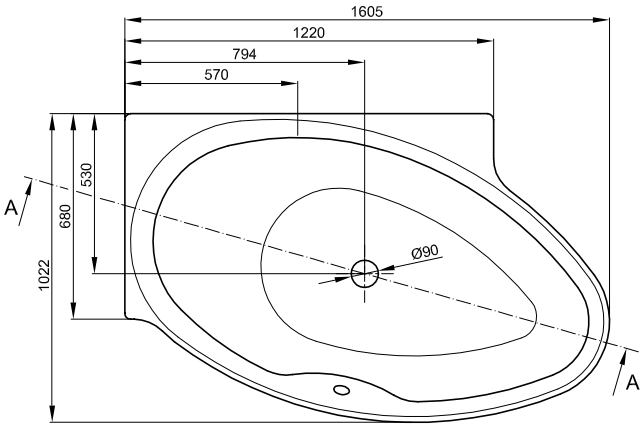

N° 1: corner left, article no. 6052

N° 2: corner right

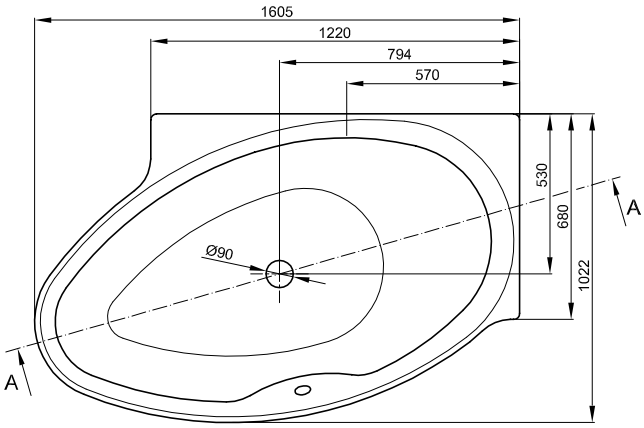

N° 2: corner right, article no. 6053

Information

Increased water level due to angled overflow.

Scope of delivery

Including noise-reducing pads.

Design: schmiddem design

A - A

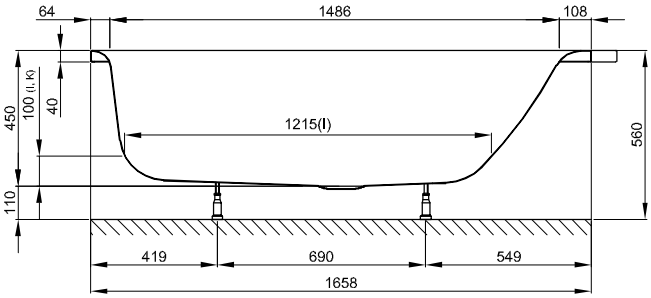

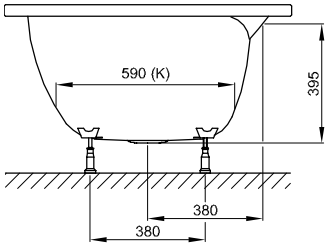

Dimensions

article no.	dimensions in mm	variant	volume*
6052	1605 × 1022 × 450	№ 1	174 litres
6053	1605 × 1022 × 450	№ 2	174 litres

*bath capacity = volume + 70 litres human water displacement.

Dimensions

PG	article no.	dimensions in mm	variant	weight (net)	White 000 → cover	coloured → cover
CO	6052	1605 × 1022 × 450	№ 1	47 kg	1.843 €	2.021 €
CO	6053	1605 × 1022 × 450	№ 2	47 kg	1.843 €	2.021 €

Extras

PG	code	description	see	price
EX	AS	BetteAnti-Slip Sense*	p. 273	190 €
EX	PLUS	BetteGlaze® Plus	p. 274	160 €
EX	HLZ	Tapholes and drilling as per special drawing	p. 276	234 €
IN		Whirlsystems	p. 378	

*Not available with Glaze® Plus. Only available in combination with White (000).

Accessories

PG	article no.	description	see	price
IN	B50-0015	Height-adjustable feet (4 pieces)	p. 343	49 €
IN	B57-0407	Bath divider 3300 × 120 mm	p. 359	33 €
IN	Z0008669	Wall Brackets	p. 360	40 €

Waste- and overflow fittings

PG	article no.	description	see	Chrome 901	White 000
IN	B608-	Waste- and overflow fitting Ø 90 mm, 725 mm	p. 320	232 €	245 €
IN	B611-	Waste, overflow and filling unit Ø 90 mm, 725 mm	p. 322	535 €	566 €

Technical information and prices of additional BetteExtras on page 270. You will find the colours in the cover. Subject to alteration and production tolerance. Prices excluding VAT.

BettePool I Panel

N° 1: corner left

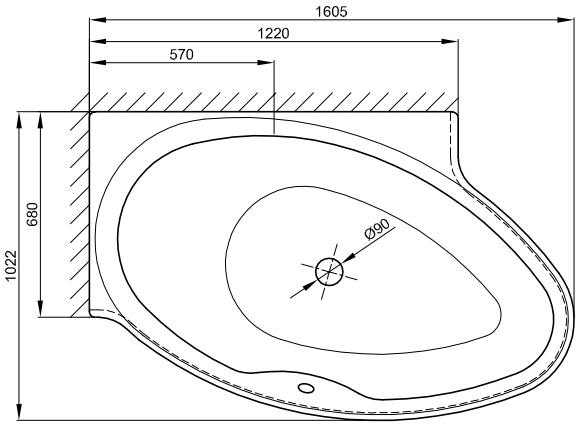

N° 1: corner left, article no. 6052 CERV

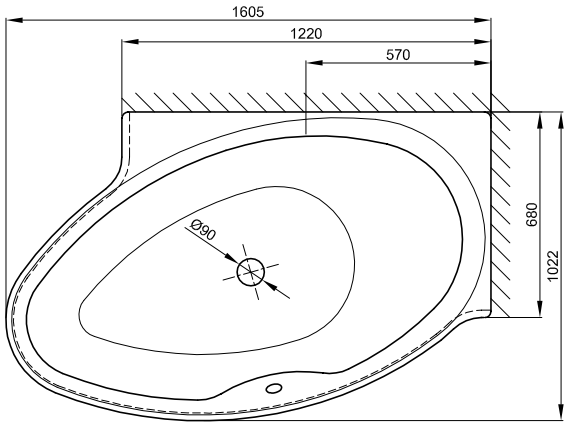

N° 2: corner right, article no. 6053 CELV

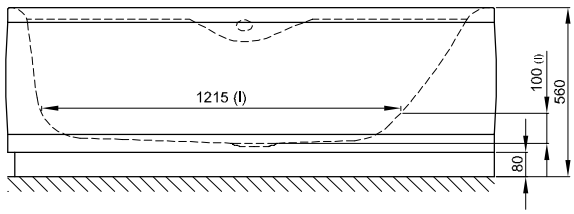

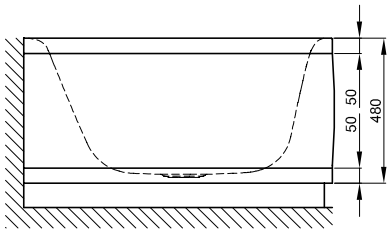

Information

Increased water level due to angled overflow.

Panel baths are supplied with a strong subframe (which includes the bath feet). The contact surface with the wall must be level. Projecting walls and pipes will prevent installation.

Combined with a whirlsystem the height of the demountable plinth increases to 140 mm.

Scope of delivery

Including noise-reducing pads.

Design: schmiddem design

Dimensions

article no.	dimensions in mm	variant	volume*
6052 CERV	1605 × 1022 × 450	№ 1	174 litres
6053 CELV	1605 × 1022 × 450	№ 2	174 litres

*bath capacity = volume + 70 litres human water displacement.

Dimensions

PG	article no.	dimensions in mm	variant	weight (net)	White 000 → cover	coloured → cover
CO	6052 CERV	1605 × 1022 × 450	№ 1	96 kg	3.675 €	4.442 €
CO	6053 CELV	1605 × 1022 × 450	№ 2	96 kg	3.675 €	4.442 €

Please note the ordering information on page 5.

Demountable Plinth

PG	article no.	dimensions in mm	suitable for	White 000 → cover	coloured → cover
CO	6051	1605 × 1022	6052 CERV, 6053 CELV	406 €	462 €

Extras

PG	code	description	see	price
EX	AS	BetteAnti-Slip Sense*	p. 273	190 €
EX	PLUS	BetteGlaze® Plus	p. 274	160 €
EX	HLZ	Tapholes and drilling as per special drawing	p. 276	234 €
IN		Whirlsystems	p. 378	

*Not available with Glaze® Plus. Only available in combination with White (000).

Waste- and overflow fittings

PG	article no.	description	see	Chrome 901	White 000
IN	B608-	Waste- and overflow fitting Ø 90 mm, 725 mm	p. 320	232 €	245 €
IN	B611-	Waste, overflow and filling unit Ø 90 mm, 725 mm	p. 322	535 €	566 €

Technical information and prices of additional BetteExtras on page 270. You will find the colours in the cover. Subject to alteration and production tolerance. Prices excluding VAT.

BettePool III

N° 1: corner left

N° 2: corner right

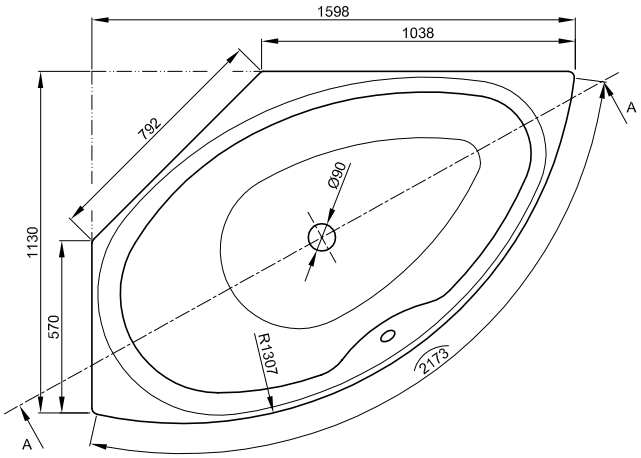

N° 1: corner left, article no. 6056

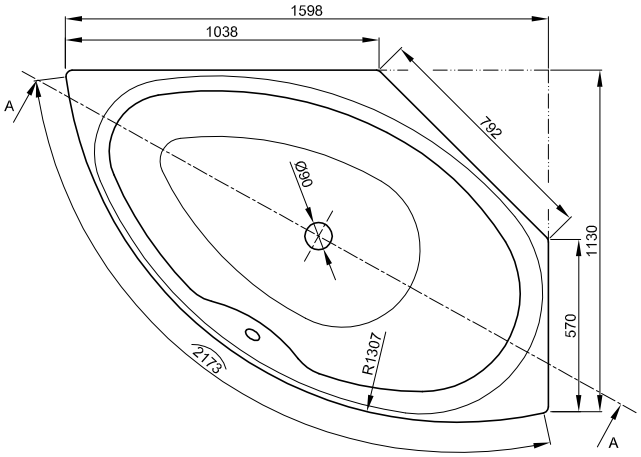

N° 2: corner right, article no. 6057

Information

Increased water level due to angled overflow.

Scope of delivery

Including noise-reducing pads.

Design: schmiddem design

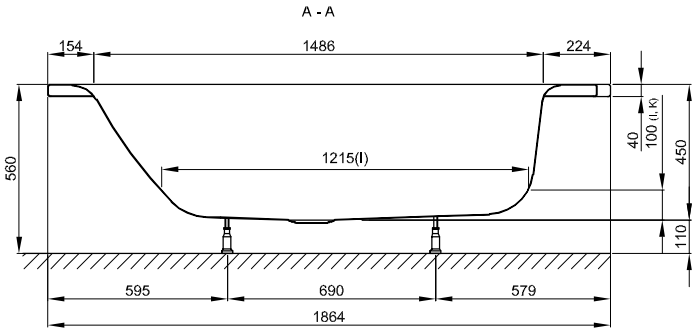

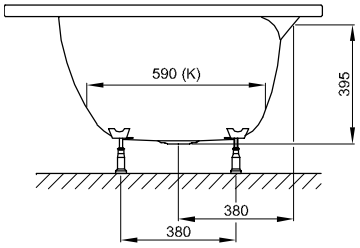

Dimensions

article no.	dimensions in mm	variant	volume*
6056	1598 × 1130 × 450	№ 1	174 litres
6057	1598 × 1130 × 450	№ 2	174 litres

*bath capacity = volume + 70 litres human water displacement.

Dimensions

PG	article no.	dimensions in mm	variant	weight (net)	White 000 → cover	coloured → cover
CO	6056	1598 × 1130 × 450	№ 1	45 kg	1.843 €	2.021 €
CO	6057	1598 × 1130 × 450	№ 2	45 kg	1.843 €	2.021 €

Extras

PG	code	description	see	price
EX	AS	BetteAnti-Slip Sense*	p. 273	190 €
EX	PLUS	BetteGlaze® Plus	p. 274	160 €
EX	HLZ	Tapholes and drilling as per special drawing	p. 276	234 €
IN		Whirlsystems	p. 378	

*Not available with Glaze® Plus. Only available in combination with White (000).

Accessories

PG	article no.	description	see	price
IN	B50-0015	Height-adjustable feet (4 pieces)	p. 343	49 €
IN	Z0008669	Wall Brackets	p. 360	40 €

Waste- and overflow fittings

PG	article no.	description	see	Chrome 901	White 000
IN	B608-	Waste- and overflow fitting Ø 90 mm, 725 mm	p. 320	232 €	245 €
IN	B611-	Waste, overflow and filling unit Ø 90 mm, 725 mm	p. 322	535 €	566 €

Technical information and prices of additional BetteExtras on page 270. You will find the colours in the cover. Subject to alteration and production tolerance. Prices excluding VAT.

BettePool III Panel Corner Installation

N° 1: corner left

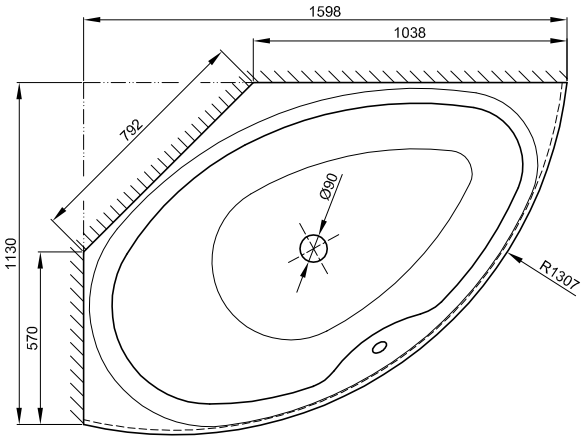

N° 1: corner left, article no. 6056 CCVV

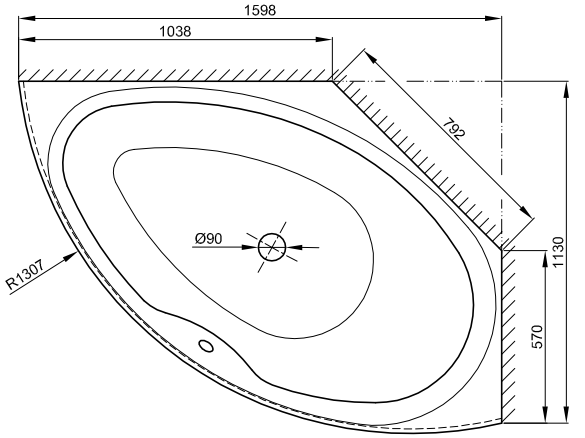

N° 2: corner right, article no. 6057 CCVV

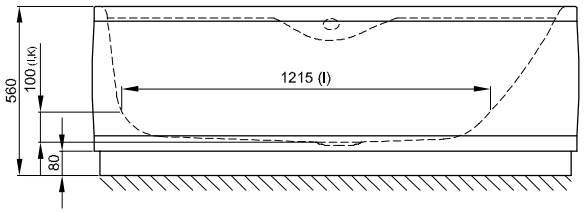

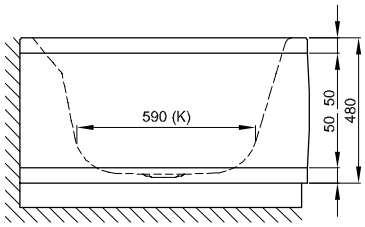

Information

Increased water level due to angled overflow.

Panel baths are supplied with a strong subframe (which includes the bath feet). The contact surface with the wall must be level. Projecting walls and pipes will prevent installation. If fitting on the finished floor, we recommend also fitting the removable plinth, which provides easy access to the connections.

Combined with a whirlsystem the height of the demountable plinth increases to 140 mm.

Scope of delivery

Including noise-reducing pads.

Design: schmiddem design

Dimensions

article no.	dimensions in mm	variant	volume*
6056 CCVV	1598 × 1130 × 450	№ 1	174 litres
6057 CCVV	1598 × 1130 × 450	№ 2	174 litres

*bath capacity = volume + 70 litres human water displacement.

Dimensions

PG	article no.	dimensions in mm	variant	weight (net)	White 000 → cover	coloured → cover
CO	6056 CCVV	1598 × 1130 × 450	№ 1	77 kg	3.675 €	4.442 €
CO	6057 CCVV	1598 × 1130 × 450	№ 2	77 kg	3.675 €	4.442 €

Please note the ordering information on page 5.

Demountable Plinth

PG	article no.	dimensions in mm	suitable for	White 000 → cover	coloured → cover
CO	6059	1598 × 1130	6056 CCVV, 6057 CCVV	406 €	462 €

Extras

PG	code	description	see	price
EX	AS	BetteAnti-Slip Sense*	p. 273	190 €
EX	PLUS	BetteGlaze® Plus	p. 274	160 €
EX	HLZ	Tapholes and drilling as per special drawing	p. 276	234 €
IN		Whirlsystems	p. 378	

*Not available with Glaze® Plus. Only available in combination with White (000).

Waste- and overflow fittings

PG	article no.	description	see	Chrome 901	White 000
IN	B608-	Waste- and overflow fitting Ø 90 mm, 725 mm	p. 320	232 €	245 €
IN	B611-	Waste, overflow and filling unit Ø 90 mm, 725 mm	p. 322	535 €	566 €

Technical information and prices of additional BetteExtras on page 270. You will find the colours in the cover. Subject to alteration and production tolerance. Prices excluding VAT.

BetteSelect

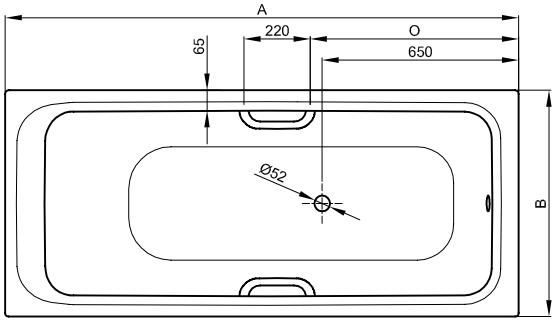

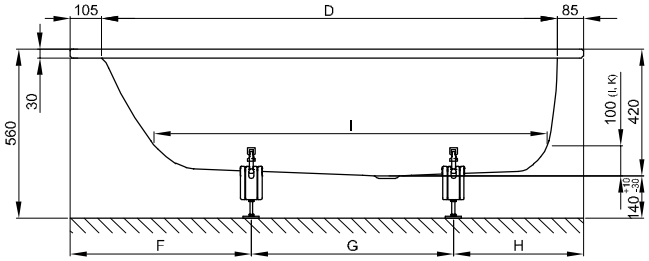

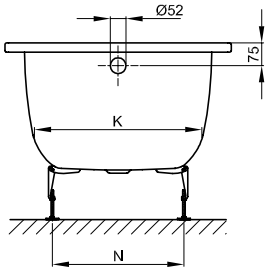

Information

For professional installation we recommend the use of the original bath feet B23-1500.

If the bath is to be fitted under a panel, please contact us for individual cut-out details.

Scope of delivery

Including noise-reducing pads.

Design: Tesseraux + Partner

Dimensions

article no.	dimensions in mm	A	B	D	F	G	H	I	K	N	O	volume*
3410	1600 × 700 × 420	1600	700	1410	560	640	400	1200	500	405	590	119 litres
3411	1700 × 700 × 420	1700	700	1510	560	760	380	1300	500	405	690	131 litres
3412	1700 × 750 × 420	1700	750	1510	560	760	380	1300	545	455	690	151 litres
3413	1800 × 800 × 420	1800	800	1610	550	845	405	1400	600	505	790	187 litres

*bath capacity = volume + 70 litres human water displacement.

Dimensions

PG	article no.	dimensions in mm	weight (net)	pcs/pallet	White 000 → cover	coloured → cover
BA	3410	1600 × 700 × 420	45 kg	10	719 €	897 €
BA	3411	1700 × 700 × 420	47 kg	10	719 €	897 €
BA	3412	1700 × 750 × 420	50 kg	10	719 € ☗	897 €
BA	3413	1800 × 800 × 420	55 kg	10	791 € ☗	969 €

Extras

PG	code	description	see	price
EX	AS	BetteAnti-Slip Sense*	p. 273	190 €
EX	PLUS	BetteGlaze® Plus	p. 274	160 €
EX	HLZ	Tapholes and drilling as per special drawing	p. 276	234 €
EX		BetteUpstand	p. 280	from 424 €
EX		Special size	p. 286	404 €
EX		Profi Corner	p. 284	from 404 €
IN		Whirlsystems	p. 378	

*Not available with Glaze® Plus. Only available in combination with White (000).

Accessories

PG	article no.	description	see	price
IN	B23-1500	Bath feet universal	p. 342	75 €
IN	B080-901	Grips B080, chrome*	p. 366	224 €
IN	B122-901	Grips B122, chrome*	p. 368	233 €
IN	B57-0372	Sealing System for baths	p. 356	106 €
IN	B57-0407	Bath divider 3300 × 120 mm	p. 359	33 €
IN	Z0008669	Wall Brackets	p. 360	40 €

* The baths need to be ordered with the ending 2GR.

Waste- and overflow fittings

PG	article no.	description	see	Chrome 901	White 000
IN	B603-	Waste- and overflow fitting Ø 52 mm, 1070 mm	p. 315	196 €	233 €
IN	B607-	Waste, overflow and filling unit Ø 52 mm, 1070 mm	p. 319	469 €	552 €
IN	B619-	Waste- and overflow fitting Plus 5, Ø 52 mm, 1070 mm	p. 325	267 €	
IN	B620-	Waste, overflow and filling unit Plus 5, Ø 52 mm, 1070 mm	p. 330	529 €	

Technical information and prices of additional BetteExtras on page 270. You will find the colours in the cover. Subject to alteration and production tolerance. Prices excluding VAT.

BetteSelect with side overflow

N° 1: foot end right, overflow front

N° 2: foot end right, overflow rear

Information

For professional installation we recommend the use of the original bath feet B23-1500.

Scope of delivery

Including noise-reducing pads.

Design: Tesseraux + Partner

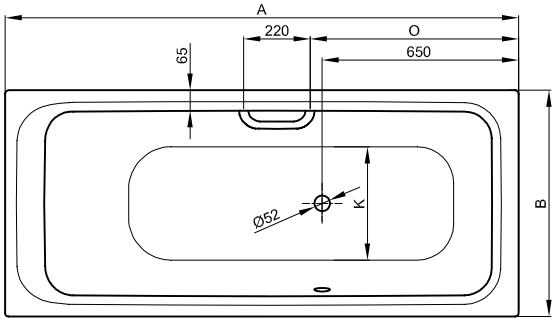

N° 1: foot end right, overflow front

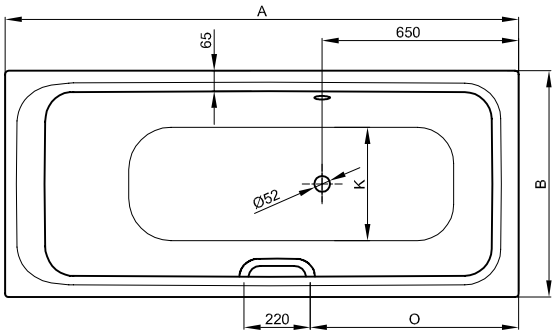

N° 2: foot end right, overflow rear

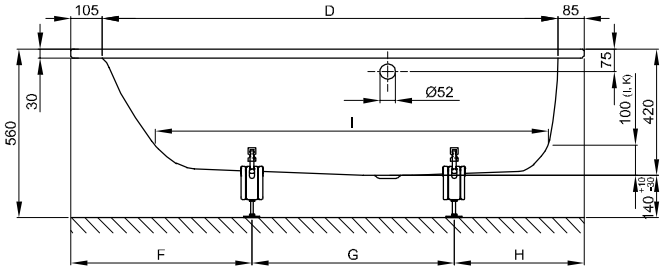

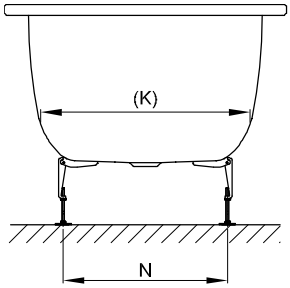

Dimensions

article no.	dimensions in mm	variant	A	B	D	F	G	H	I	K	N	O	volume*
3420	1600 × 700 × 420	№ 1	1600	700	1410	560	640	400	1200	500	405	590	119 litres
3430	1600 × 700 × 420	№ 2	1600	700	1410	560	640	400	1200	500	405	590	119 litres
3421	1700 × 700 × 420	№ 1	1700	700	1510	560	760	380	1300	500	405	690	131 litres
3431	1700 × 700 × 420	№ 2	1700	700	1510	560	760	380	1300	500	405	690	131 litres
3422	1700 × 750 × 420	№ 1	1700	750	1510	560	760	380	1300	545	455	690	151 litres
3432	1700 × 750 × 420	№ 2	1700	750	1510	560	760	380	1300	545	455	690	151 litres
3423	1800 × 800 × 420	№ 1	1800	800	1610	550	845	405	1400	600	505	790	187 litres
3433	1800 × 800 × 420	№ 2	1800	800	1610	550	845	405	1400	600	505	790	187 litres

*bath capacity = volume + 70 litres human water displacement.

Dimensions

PG	article no.	dimensions in mm	variant	weight (net)	pcs/pallet	White 000 → cover	coloured → cover
BA	3420	1600 × 700 × 420	№ 1	45 kg	10	719 €	897 €
BA	3430	1600 × 700 × 420	№ 2	45 kg	10	719 €	897 €
BA	3421	1700 × 700 × 420	№ 1	47 kg	10	719 €	897 €
BA	3431	1700 × 700 × 420	№ 2	47 kg	10	719 €	897 €
BA	3422	1700 × 750 × 420	№ 1	50 kg	10	719 € ☗	897 €
BA	3432	1700 × 750 × 420	№ 2	50 kg	10	719 € ☗	897 €
BA	3423	1800 × 800 × 420	№ 1	55 kg	10	791 € ☗	969 €
BA	3433	1800 × 800 × 420	№ 2	55 kg	10	791 € ☗	969 €

Extras

PG	code	description	see	price
EX	AS	BetteAnti-Slip Sense*	p. 273	190 €
EX	PLUS	BetteGlaze® Plus	p. 274	160 €
EX	HLZ	Tapholes and drilling as per special drawing	p. 276	234 €
EX		BetteUpstand	p. 280	from 424 €
EX		Special size	p. 286	404 €
EX		Profi Corner	p. 284	from 404 €
IN		Whirlsystems	p. 378	

*Not available with Glaze® Plus. Only available in combination with White (000).

Accessories

PG	article no.	description	see	price
IN	B23-1500	Bath feet universal	p. 342	75 €
IN	B090-901	Grip B090, chrome*	p. 367	178 €
IN	B120-901	Grip B120, chrome*	p. 368	178 €
IN	B57-0372	Sealing System for baths	p. 356	106 €
IN	B57-0407	Bath divider 3300 × 120 mm	p. 359	33 €
IN	Z0008669	Wall Brackets	p. 360	40 €

* The baths need to be ordered with the ending 1GR.

Waste- and overflow fittings

PG	article no.	description	see	Chrome 901	White 000
IN	B602-	Waste- and overflow fitting Ø 52 mm, 725 mm	p. 314	154 €	177 €
IN	B606-	Waste, overflow and filling unit Ø 52 mm, 725 mm	p. 318	423 €	514 €
IN	B619-	Waste- and overflow fitting Plus 5, Ø 52 mm, 1070 mm	p. 325	267 €	
IN	B620-	Waste, overflow and filling unit Plus 5, Ø 52 mm, 1070 mm	p. 330	529 €	
IN	B630-	Waste- and overflow fitting Simplex Ø 52 mm, 725 mm	p. 337	99 €	

Technical information and prices of additional BetteExtras on page 270. You will find the colours in the cover. Subject to alteration and production tolerance. Prices excluding VAT.

BetteSelect Duo

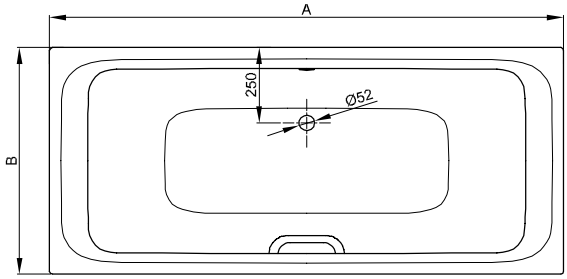

Information

For professional installation we recommend the use of the original bath feet B23-1500.

If the bath is to be fitted under a panel, please contact us for individual cut-out details.

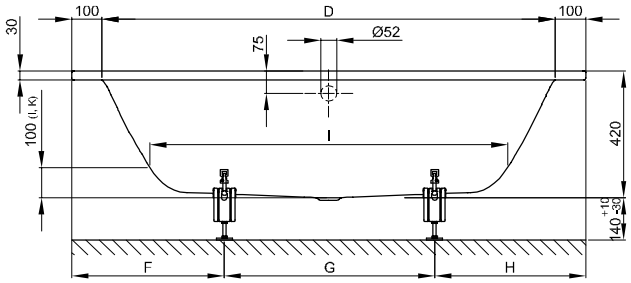

Scope of delivery

Including noise-reducing pads.

Design: Tesseraux + Partner

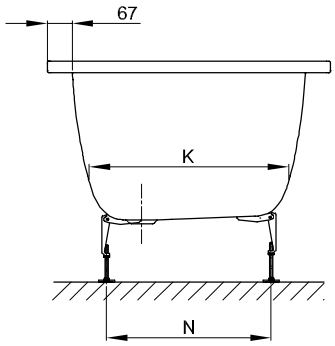

Dimensions

article no.	dimensions in mm	A	B	D	F	G	H	I	K	N	volume*
3472	1700 × 750 × 420	1700	750	1500	500	700	500	1185	520	435	134 litres
3473	1800 × 800 × 420	1800	800	1600	480	840	480	1285	570	485	170 litres

*bath capacity = volume + 70 litres human water displacement.

Dimensions

PG	article no.	dimensions in mm	weight (net)	pcs/pallet	White 000 → cover	coloured → cover
BA	3472	1700 × 750 × 420	44 kg	10	752 €	930 €
BA	3473	1800 × 800 × 420	48 kg	10	827 € ☗	1.005 €

Extras

PG	code	description	see	price
EX	AS	BetteAnti-Slip Sense*	p. 273	190 €
EX	PLUS	BetteGlaze® Plus	p. 274	160 €
EX		BetteUpstand	p. 280	from 424 €
EX		Special size	p. 286	404 €
EX		Profi Corner	p. 284	from 404 €
IN		Whirlsystems	p. 378	

*Not available with Glaze® Plus. Only available in combination with White (000).

Accessories

PG	article no.	description	see	price
IN	B23-1500	Bath feet universal	p. 342	75 €
IN	B090-901	Grip B090, chrome*	p. 367	178 €
IN	B120-901	Grip B120, chrome*	p. 368	178 €
IN	B57-0372	Sealing System for baths	p. 356	106 €
IN	B57-0407	Bath divider 3300 × 120 mm	p. 359	33 €
IN	Z0008669	Wall Brackets	p. 360	40 €

* The baths need to be ordered with the ending 1GR.

Waste- and overflow fittings

PG	article no.	description	see	Chrome 901	White 000
IN	B600-	Waste- and overflow fitting Ø 52 mm, 560 mm	p. 312	150 €	180 €
IN	B604-	Waste, overflow and filling unit Ø 52 mm, 560 mm	p. 316	403 €	477 €
IN	B617-	Waste- and overflow fitting Plus 5, Ø 52 mm, 560 mm	p. 324	234 €	
IN	B618-	Waste, overflow and filling unit Plus 5, Ø 52 mm, 560 mm	p. 329	456 €	

Technical information and prices of additional BetteExtras on page 270. You will find the colours in the cover. Subject to alteration and production tolerance. Prices excluding VAT.

BetteSet

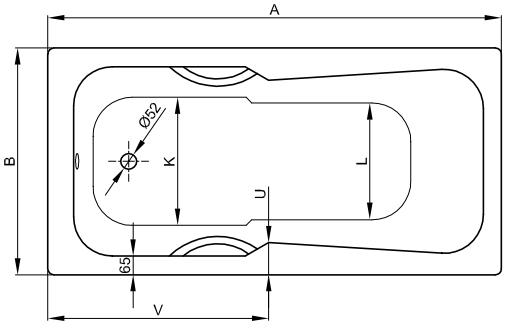

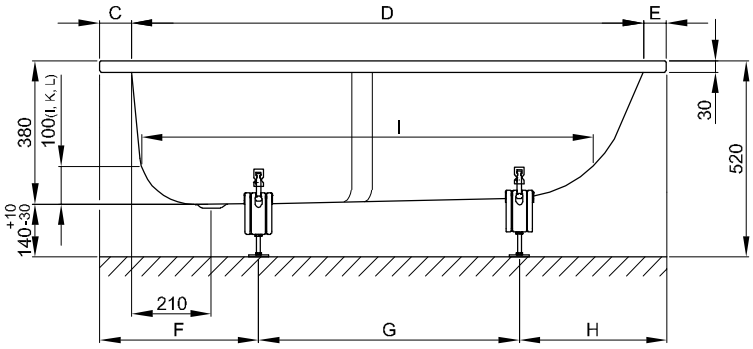

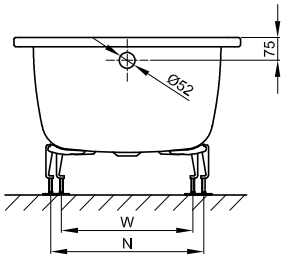

Information

For professional installation we recommend the use of the original bath feet B23-1500.

If the bath is to be fitted under a panel, please contact us for individual cut-out details.

Scope of delivery

Including noise-reducing pads.

Dimensions

article no.	dimensions in mm	A	B	C	D	E	F	G	H	I	K	L	N	U	V	W	volume*
2560	1500 × 750 × 380	1500	750	85	1355	60	375	705	420	1195	560	470	540	100	720	435	94 litres
3650	1600 × 700 × 380	1600	700	95	1440	65	390	730	480	1235	520	435	545	105	780	445	86 litres
3660	1600 × 750 × 380	1600	750	85	1455	60	390	730	480	1250	560	470	545	100	740	445	105 litres
3560	1650 × 750 × 380	1650	750	95	1455	100	385	710	555	1250	560	470	530	100	760	455	105 litres
3060	1700 × 750 × 380	1700	750	95	1545	60	400	820	480	1350	560	470	530	100	800	430	116 litres
3760	1700 × 800 × 380	1700	800	85	1560	55	405	830	465	1350	610	520	580	105	800	435	128 litres
3860	1800 × 800 × 380	1800	800	85	1655	60	425	850	525	1435	610	520	600	105	820	420	140 litres

*bath capacity = volume + 70 litres human water displacement.

Dimensions

PG	article no.	dimensions in mm	weight (net)	pcs/pallet	White 000 → cover	coloured → cover
BA	2560	1500 × 750 × 380	42.1 kg	8	755 €	933 €
BA	3650	1600 × 700 × 380	43 kg	8	755 € ☗	933 €
BA	3660	1600 × 750 × 380	46.1 kg	8	755 € ☗	933 €
BA	3560	1650 × 750 × 380	47 kg	8	755 €	933 €
BA	3060	1700 × 750 × 380	48.7 kg	8	755 € ☗	933 €
BA	3760	1700 × 800 × 380	48.9 kg	8	755 € ☗	933 €
BA	3860	1800 × 800 × 380	51 kg	8	831 € ☗	1.009 €

Extras

PG	code	description	see	price
EX	AS	BetteAnti-Slip Sense*	p. 273	190 €
EX	PLUS	BetteGlaze® Plus	p. 274	160 €
EX	HLZ	Tapholes and drilling as per special drawing	p. 276	234 €
EX		BetteUpstand	p. 280	from 424 €
EX		Special size	p. 286	404 €
EX		Profi Corner	p. 284	from 404 €
IN		Whirlsystems	p. 378	

*Not available with Glaze® Plus. Only available in combination with White (000).

Accessories

PG	article no.	description	see	price
IN	B23-1500	Bath feet universal	p. 342	75 €
IN	B110-901	Grips B110, chrome*	p. 367	224 €
IN	B57-0372	Sealing System for baths	p. 356	106 €
IN	B57-0407	Bath divider 3300 × 120 mm	p. 359	33 €
IN	Z0008669	Wall Brackets	p. 360	40 €

* The baths need to be ordered with the ending 2GR.

Waste- and overflow fittings

PG	article no.	description	see	Chrome 901	White 000
IN	B600-	Waste- and overflow fitting Ø 52 mm, 560 mm	p. 312	150 €	180 €
IN	B604-	Waste, overflow and filling unit Ø 52 mm, 560 mm	p. 316	403 €	477 €
IN	B617-	Waste- and overflow fitting Plus 5, Ø 52 mm, 560 mm	p. 324	234 €	
IN	B618-	Waste, overflow and filling unit Plus 5, Ø 52 mm, 560 mm	p. 329	456 €	

Technical information and prices of additional BetteExtras on page 270. You will find the colours in the cover. Subject to alteration and production tolerance. Prices excluding VAT.

BetteSpace S

N° 1: corner left

N° 2: corner right

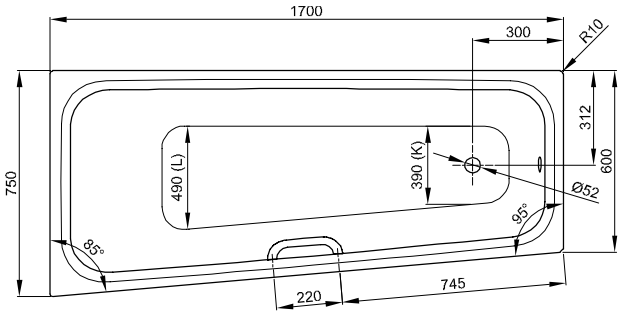

N° 1: corner left

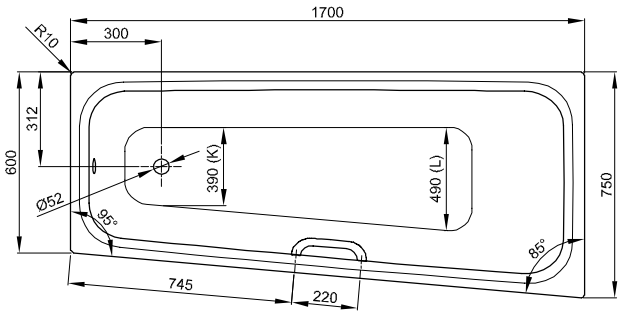

N° 2: corner right

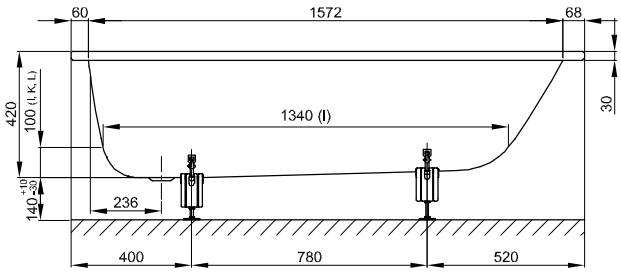

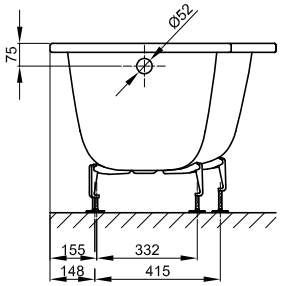

Information

For professional installation we recommend the use of the original bath feet B23-1500.

If the bath is to be fitted under a panel, please contact us for individual cut-out details.

Scope of delivery

Including noise-reducing pads.

Design: Tesseraux + Partner

Dimensions

article no.	dimensions in mm	variant	volume*
1130	1700 × 750 × 420	№ 1	122 litres
1140	1700 × 750 × 420	№ 2	122 litres

*bath capacity = volume + 70 litres human water displacement.

Dimensions

PG	article no.	dimensions in mm	variant	weight (net)	pcs/pallet	White 000 → cover	coloured → cover
CO	1130	1700 × 750 × 420	№ 1	41.5 kg	15	1.018 € ☗	1.196 €
CO	1140	1700 × 750 × 420	№ 2	41.5 kg	15	1.018 € ☗	1.196 €

Extras

PG	code	description	see	price
EX	AS	BetteAnti-Slip Sense*	p. 273	190 €
EX	PLUS	BetteGlaze® Plus	p. 274	160 €
EX		BetteUpstand	p. 280	from 424 €
EX		Special size	p. 286	404 €
IN		Whirlsystems	p. 378	

*Not available with Glaze® Plus. Only available in combination with White (000).

Accessories

PG	article no.	description	see	price
IN	B23-1500	Bath feet universal	p. 342	75 €
IN	B090-901	Grip B090, chrome*	p. 367	178 €
IN	B120-901	Grip B120, chrome*	p. 368	178 €
IN	B57-0407	Bath divider 3300 × 120 mm	p. 359	33 €
IN	Z0008669	Wall Brackets	p. 360	40 €

* The baths need to be ordered with the ending 1GR.

Waste- and overflow fittings

PG	article no.	description	see	Chrome 901	White 000
IN	B600-	Waste- and overflow fitting Ø 52 mm, 560 mm	p. 312	150 €	180 €
IN	B604-	Waste, overflow and filling unit Ø 52 mm, 560 mm	p. 316	403 €	477 €
IN	B617-	Waste- and overflow fitting Plus 5, Ø 52 mm, 560 mm	p. 324	234 €	
IN	B618-	Waste, overflow and filling unit Plus 5, Ø 52 mm, 560 mm	p. 329	456 €	

Technical information and prices of additional BetteExtras on page 270. You will find the colours in the cover. Subject to alteration and production tolerance. Prices excluding VAT.

BetteSpace M

N° 1: corner left

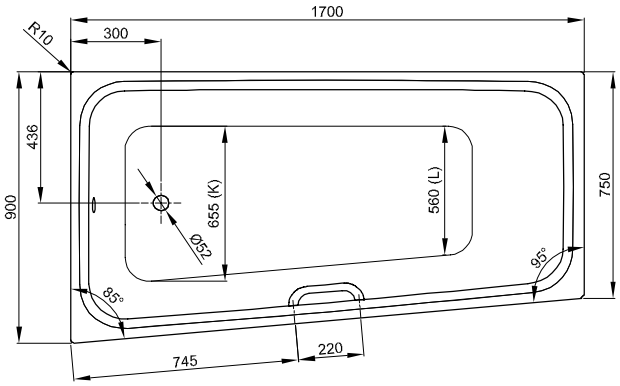

N° 1: corner left

N° 2: corner right

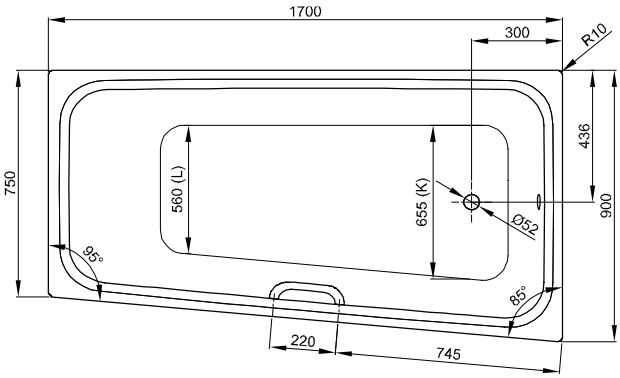

N° 2: corner right

Information

For professional installation we recommend the use of the original bath feet B23-1500.

If the bath is to be fitted under a panel, please contact us for individual cut-out details.

Scope of delivery

Including noise-reducing pads.

Design: Tesseraux + Partner

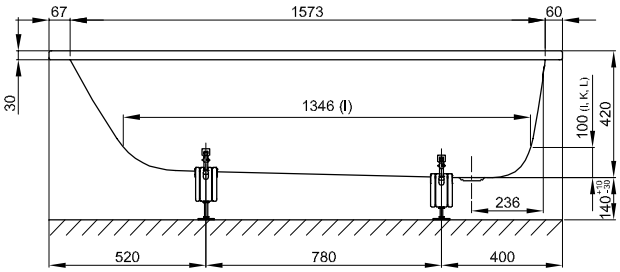

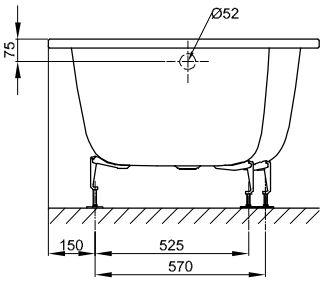

Dimensions

article no.	dimensions in mm	variant	volume*
1131	1700 × 900 × 420	№ 1	192 litres
1141	1700 × 900 × 420	№ 2	192 litres

*bath capacity = volume + 70 litres human water displacement.

Dimensions

PG	article no.	dimensions in mm	variant	weight (net)	pcs/pallet	White 000 → cover	coloured → cover
CO	1131	1700 × 900 × 420	№ 1	47.5 kg	15	1.260 €	1.438 €
CO	1141	1700 × 900 × 420	№ 2	47.5 kg	15	1.260 €	1.438 €

Extras

PG	code	description	see	price
EX	AS	BetteAnti-Slip Sense*	p. 273	190 €
EX	PLUS	BetteGlaze® Plus	p. 274	160 €
EX		BetteUpstand	p. 280	from 424 €
EX		Special size	p. 286	404 €
IN		Whirlsystems	p. 378	

*Not available with Glaze® Plus. Only available in combination with White (000).

Accessories

PG	article no.	description	see	price
IN	B23-1500	Bath feet universal	p. 342	75 €
IN	B090-901	Grip B090, chrome*	p. 367	178 €
IN	B120-901	Grip B120, chrome*	p. 368	178 €
IN	B57-0407	Bath divider 3300 × 120 mm	p. 359	33 €
IN	Z0008669	Wall Brackets	p. 360	40 €

* The baths need to be ordered with the ending 1GR.

Waste- and overflow fittings

PG	article no.	description	see	Chrome 901	White 000
IN	B600-	Waste- and overflow fitting Ø 52 mm, 560 mm	p. 312	150 €	180 €
IN	B604-	Waste, overflow and filling unit Ø 52 mm, 560 mm	p. 316	403 €	477 €
IN	B617-	Waste- and overflow fitting Plus 5, Ø 52 mm, 560 mm	p. 324	234 €	
IN	B618-	Waste, overflow and filling unit Plus 5, Ø 52 mm, 560 mm	p. 329	456 €	

Technical information and prices of additional BetteExtras on page 270. You will find the colours in the cover. Subject to alteration and production tolerance. Prices excluding VAT.

BetteSpace L

N° 1: corner left

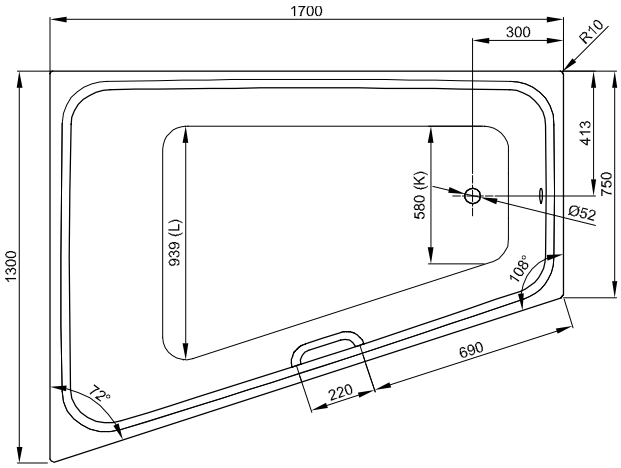

N° 1: corner left

N° 2: corner right

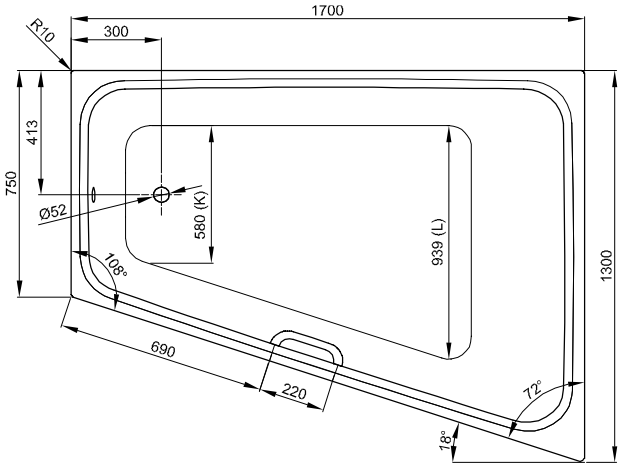

N° 2: corner right

Information

For professional installation we recommend the use of the original bath feet B50-0015.

If the bath is to be fitted under a panel, please contact us for individual cut-out details.

Scope of delivery

Including noise-reducing pads.

Design: Tesseraux + Partner

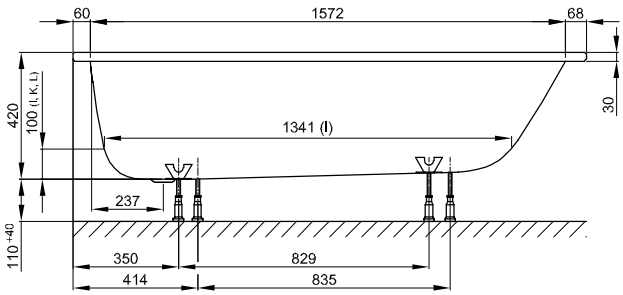

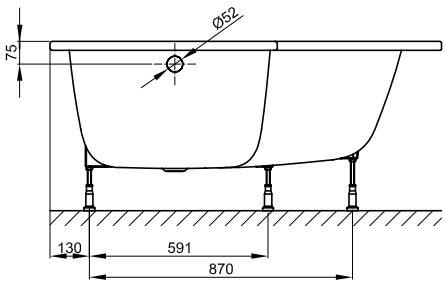

Dimensions

article no.	dimensions in mm	variant	volume*
1132	1700 × 1300 × 420	№ 1	262 litres
1142	1700 × 1300 × 420	№ 2	262 litres

*bath capacity = volume + 70 litres human water displacement.

Dimensions

PG	article no.	dimensions in mm	variant	weight (net)	White 000 → cover	coloured → cover
CO	1132	1700 × 1300 × 420	№ 1	55.8 kg	2.120 €	2.298 €
CO	1142	1700 × 1300 × 420	№ 2	55.8 kg	2.120 €	2.298 €

Extras

PG	code	description	see	price
EX	AS	BetteAnti-Slip Sense*	p. 273	190 €
EX	PLUS	BetteGlaze® Plus	p. 274	160 €
EX		BetteUpstand	p. 280	from 424 €
EX		Special size	p. 286	404 €
IN		Whirlsystems	p. 378	

*Not available with Glaze® Plus. Only available in combination with White (000).

Accessories

PG	article no.	description	see	price
IN	B50-0015	Height-adjustable feet (4 pieces)	p. 343	49 €
IN	B090-901	Grip B090, chrome*	p. 367	178 €
IN	B120-901	Grip B120, chrome*	p. 368	178 €
IN	B57-0407	Bath divider 3300 × 120 mm	p. 359	33 €
IN	Z0008669	Wall Brackets	p. 360	40 €

* The baths need to be ordered with the ending 1GR.

Waste- and overflow fittings

PG	article no.	description	see	Chrome 901	White 000
IN	B600-	Waste- and overflow fitting Ø 52 mm, 560 mm	p. 312	150 €	180 €
IN	B604-	Waste, overflow and filling unit Ø 52 mm, 560 mm	p. 316	403 €	477 €
IN	B617-	Waste- and overflow fitting Plus 5, Ø 52 mm, 560 mm	p. 324	234 €	
IN	B618-	Waste, overflow and filling unit Plus 5, Ø 52 mm, 560 mm	p. 329	456 €	

Technical information and prices of additional BetteExtras on page 270. You will find the colours in the cover. Subject to alteration and production tolerance. Prices excluding VAT.

BetteStarlet

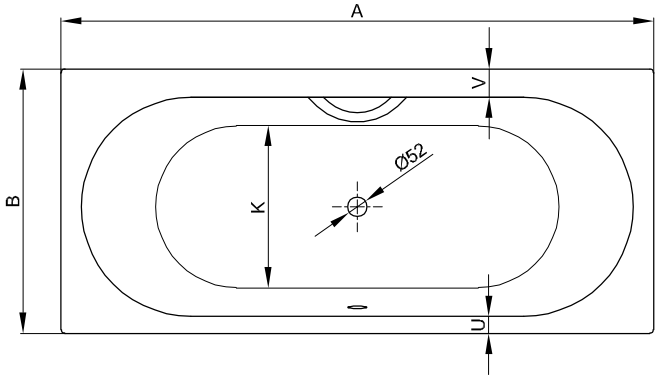

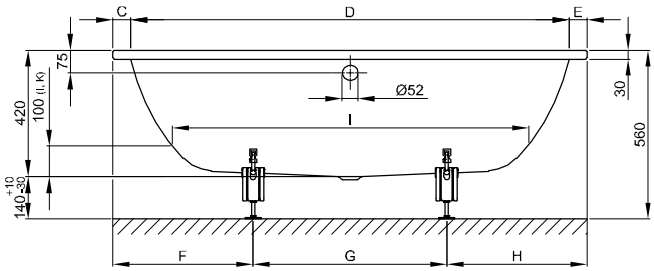

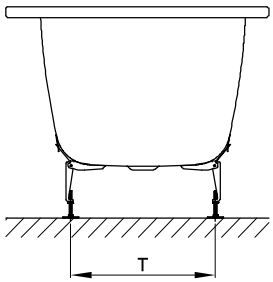

Information

The BetteStarlet, 1900 × 900 × 420 mm, article no. 1830, is not available with BetteUpstand.

For professional installation we recommend the use of the original bath feet B23-1500.

If the bath is to be fitted under a panel, please contact us for individual cut-out details.

Scope of delivery

Including noise-reducing pads.

Dimensions

article no.	dimensions in mm	A	B	C	D	E	F	G	H	I	K	T	U	V	volume*
1210	1500 × 800 × 420	1500	800	80	1340	80	540	420	540	1070	555	495	80	80	107 litres
2590	1570 × 700 × 420	1570	700	65	1440	65	470	630	470	1170	455	425	65	95	92 litres
2540	1600 × 650 × 420	1600	650	80	1440	80	480	640	480	1170	455	425	55	55	92 litres
1220	1600 × 700 × 420	1600	700	80	1440	80	485	630	485	1170	455	425	80	80	92 litres
1230	1650 × 700 × 420	1650	700	105	1440	105	510	630	510	1170	455	425	80	80	92 litres
1730	1700 × 700 × 420	1700	700	80	1540	80	505	690	505	1270	505	480	55	55	122 litres
1380	1700 × 750 × 420	1700	750	80	1540	80	500	700	500	1270	505	480	80	80	122 litres
1450	1750 × 800 × 420	1750	800	105	1540	105	520	710	520	1270	505	485	105	105	122 litres
1430	1800 × 750 × 420	1800	750	80	1640	80	530	740	530	1370	555	485	55	55	155 litres
1630	1800 × 800 × 420	1800	800	80	1640	80	530	740	530	1370	555	485	80	80	155 litres
1631	1850 × 850 × 420	1850	850	105	1640	105	562	726	562	1370	555	485	105	105	155 litres
1830	1900 × 900 × 420	1900	900	85	1730	85	560	780	560	1465	625	560	80	80	205 litres

*bath capacity = volume + 70 litres human water displacement.

Dimensions

PG	article no.	dimensions in mm	weight (net)	pcs/pallet	White 000 → cover	coloured → cover
CO	1210	1500 × 800 × 420	43.53 kg	13	829 €	1.007 €
CO	2590	1570 × 700 × 420	50 kg	6	829 €	1.007 €
CO	2540	1600 × 650 × 420	50 kg	6	829 €	1.007 €
CO	1220	1600 × 700 × 420	42.1 kg	12	829 €	1.007 €
CO	1230	1650 × 700 × 420	45.5 kg	14	829 €	1.007 €
CO	1730	1700 × 700 × 420	43.8 kg	14	829 € ☗	1.007 €
CO	1380	1700 × 750 × 420	46.2 kg	14	829 € ☗	1.007 €
CO	1450	1750 × 800 × 420	50.9 kg	14	871 € ☗	1.049 €
CO	1430	1800 × 750 × 420	48.7 kg	14	922 € ☗	1.100 €
CO	1630	1800 × 800 × 420	51 kg	14	966 € ☗	1.144 €
CO	1631	1850 × 850 × 420	50 kg	8	1.073 €	1.251 €
CO	1830	1900 × 900 × 420	57.7 kg	13	1.213 € ☗	1.391 €

Extras

PG	code	description	see	price
EX	AS	BetteAnti-Slip Sense*	p. 273	190 €
EX	PLUS	BetteGlaze® Plus	p. 274	160 €
EX	HLZ	Tapholes and drilling as per special drawing	p. 276	234 €
EX		BetteUpstand	p. 280	from 424 €
EX		Special size	p. 286	404 €
EX		Profi Corner	p. 284	from 404 €
IN		Whirlsystems	p. 378	

*Not available with Glaze® Plus. Only available in combination with White (000).

Accessories

PG	article no.	description	see	price
IN	B23-1500	Bath feet universal	p. 342	75 €
IN	B090-901	Grip B090, chrome*	p. 367	178 €
IN	B120-901	Grip B120, chrome*	p. 368	178 €
IN	B57-0372	Sealing System for baths	p. 356	106 €
IN	B57-0407	Bath divider 3300 × 120 mm	p. 359	33 €
IN	Z0008669	Wall Brackets	p. 360	40 €

* The baths need to be ordered with the ending 1GR.

Waste- and overflow fittings

PG	article no.	description	see	Chrome 901	White 000
IN	B602-	Waste- and overflow fitting Ø 52 mm, 725 mm	p. 314	154 €	177 €
IN	B603-	Waste- and overflow fitting Ø 52 mm, 1070 mm → 1900 × 900 mm	p. 315	196 €	233 €
IN	B606-	Waste, overflow and filling unit Ø 52 mm, 725 mm	p. 318	423 €	514 €
IN	B607-	Waste, overflow and filling unit Ø 52 mm, 1070 mm → 1900 × 900 mm	p. 319	469 €	552 €
IN	B619-	Waste- and overflow fitting Plus 5, Ø 52 mm, 1070 mm	p. 325	267 €	
IN	B620-	Waste, overflow and filling unit Plus 5, Ø 52 mm, 1070 mm	p. 330	529 €	

Technical information and prices of additional BetteExtras on page 270. You will find the colours in the cover. Subject to alteration and production tolerance. Prices excluding VAT.

BetteStarlet Spirit

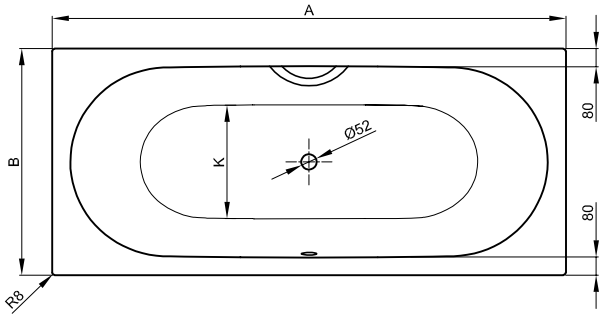

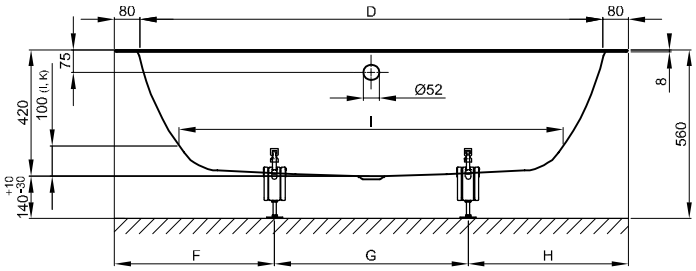

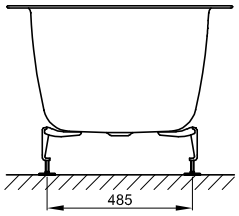

Information

Due to the folded edge, standard commercially available bath anchors cannot be combined. We therefore recommend the Wall Brackets (item no. Z0008669) for mounting.

For professional installation we recommend the use of the original bath feet B23-1500.

Scope of delivery

Including noise-reducing pads.

Dimensions

article no.	dimensions in mm	A	B	D	F	G	H	I	K	volume*
1384	1700 × 750 × 420	1700	750	1540	500	700	500	1270	505	122 litres
1634	1800 × 800 × 420	1800	800	1640	530	740	530	1370	555	155 litres

*bath capacity = volume + 70 litres human water displacement.

Dimensions

PG	article no.	dimensions in mm	weight (net)	pcs/pallet	White 000 → cover	coloured → cover
CO	1384	1700 × 750 × 420	42 kg	12	1.552 €	1.730 €
CO	1634	1800 × 800 × 420	48 kg	12	1.708 €	1.886 €

Extras

PG	code	description	see	price
EX	AS	BetteAnti-Slip Sense*	p. 273	190 €
EX	PLUS	BetteGlaze® Plus	p. 274	160 €
EX	HLZ	Tapholes and drilling as per special drawing	p. 276	234 €
IN		Whirlsystems	p. 378	

*Not available with Glaze® Plus. Only available in combination with White (000).

Accessories

PG	article no.	description	see	price
IN	B23-1500	Bath feet universal	p. 342	75 €
IN	B090-901	Grip B090, chrome*	p. 367	178 €
IN	B120-901	Grip B120, chrome*	p. 368	178 €
IN	B57-0372	Sealing System for baths	p. 356	106 €
IN	B57-0407	Bath divider 3300 × 120 mm	p. 359	33 €
IN	Z0008669	Wall Brackets	p. 360	40 €

* The baths need to be ordered with the ending 1GR.

Waste- and overflow fittings

PG	article no.	description	see	Chrome 901	White 000
IN	B602-	Waste- and overflow fitting Ø 52 mm, 725 mm	p. 314	154 €	177 €
IN	B606-	Waste, overflow and filling unit Ø 52 mm, 725 mm	p. 318	423 €	514 €
IN	B619-	Waste- and overflow fitting Plus 5, Ø 52 mm, 1070 mm	p. 325	267 €	
IN	B620-	Waste, overflow and filling unit Plus 5, Ø 52 mm, 1070 mm	p. 330	529 €	

Technical information and prices of additional BetteExtras on page 270. You will find the colours in the cover. Subject to alteration and production tolerance. Prices excluding VAT.

BetteStarlet I

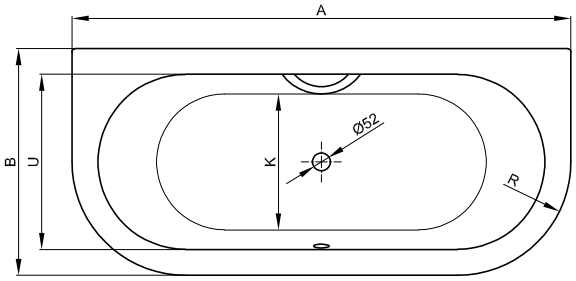

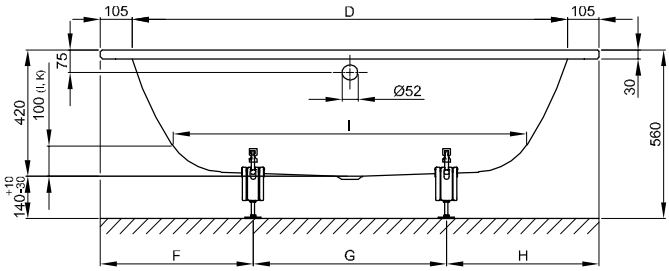

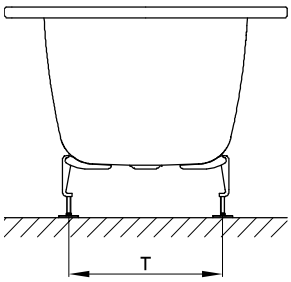

Information

For professional installation we recommend the use of the original bath feet B23-1500.

Scope of delivery

Including noise-reducing pads.

Dimensions

article no.	dimensions in mm	A	B	D	F	G	H	I	K	R	T	U	volume*
8300	1650 × 750 × 420	1650	750	1440	505	640	505	1170	455	375	425	540	92 litres
8310	1750 × 800 × 420	1750	800	1540	510	730	510	1270	505	400	480	590	122 litres
8320	1850 × 850 × 420	1850	850	1640	550	750	550	1370	555	425	485	640	155 litres

*bath capacity = volume + 70 litres human water displacement.

Dimensions

PG	article no.	dimensions in mm	weight (net)	pcs/pallet	White 000 → cover	coloured → cover
CO	8300	1650 × 750 × 420	48 kg	6	2.007 €	2.185 €
CO	8310	1750 × 800 × 420	48 kg	6	2.107 €	2.285 €
CO	8320	1850 × 850 × 420	48 kg	8	2.208 €	2.386 €

Extras

PG	code	description	see	price
EX	AS	BetteAnti-Slip Sense*	p. 273	190 €
EX	PLUS	BetteGlaze® Plus	p. 274	160 €
EX	HLZ	Tapholes and drilling as per special drawing	p. 276	234 €
EX		Profi Corner	p. 284	from 404 €
IN		Whirlsystems	p. 378	

*Not available with Glaze® Plus. Only available in combination with White (000).

Accessories

PG	article no.	description	see	price
IN	B23-1500	Bath feet universal	p. 342	75 €
IN	B090-901	Grip B090, chrome*	p. 367	178 €
IN	B120-901	Grip B120, chrome*	p. 368	178 €
IN	B57-0372	Sealing System for baths	p. 356	106 €
IN	B57-0407	Bath divider 3300 × 120 mm	p. 359	33 €
IN	Z0008669	Wall Brackets	p. 360	40 €

* The baths need to be ordered with the ending 1GR.

Waste- and overflow fittings

PG	article no.	description	see	Chrome 901	White 000
IN	B602-	Waste- and overflow fitting Ø 52 mm, 725 mm	p. 314	154 €	177 €
IN	B606-	Waste, overflow and filling unit Ø 52 mm, 725 mm	p. 318	423 €	514 €
IN	B619-	Waste- and overflow fitting Plus 5, Ø 52 mm, 1070 mm	p. 325	267 €	
IN	B620-	Waste, overflow and filling unit Plus 5, Ø 52 mm, 1070 mm	p. 330	529 €	

Technical information and prices of additional BetteExtras on page 270. You will find the colours in the cover. Subject to alteration and production tolerance. Prices excluding VAT.

BetteStarlet I Silhouette

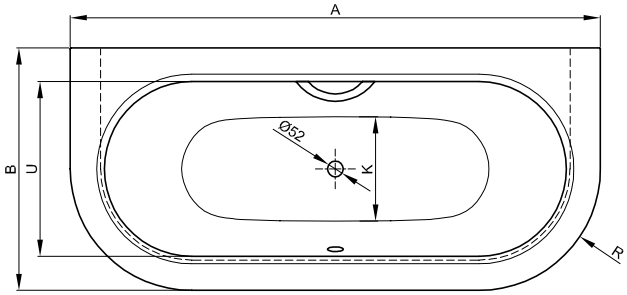

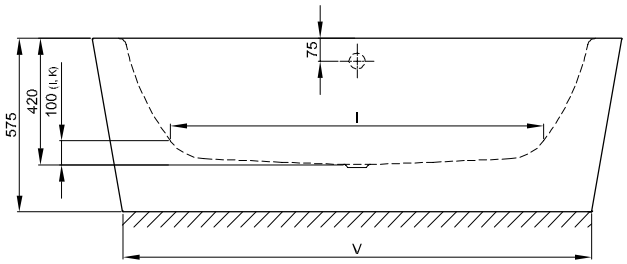

Information

If this bath is ordered with waste fitting this will come prefitted. If ordered with Trio waste the bath comes with prefitted Sanfix tube for water supply. A flexible drain pipe is generally included in delivery.

If combined with BetteWhirlsystems it is necessary to provide an adequate air supply under the bath.

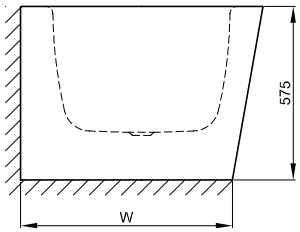

Scope of delivery

Including noise-reducing pads.

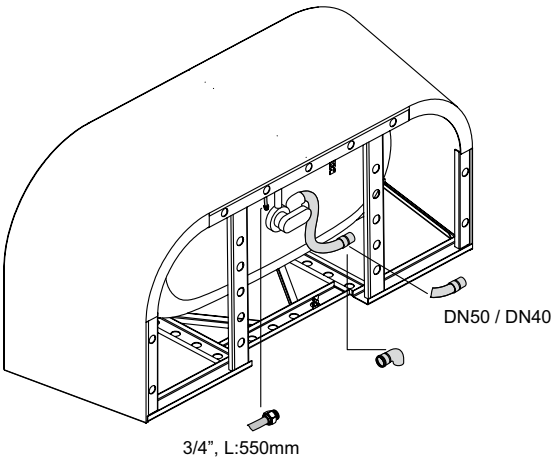

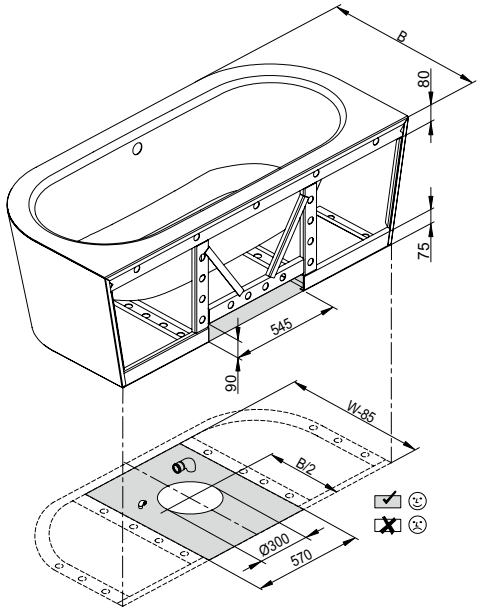

Adequate position to connect the drainage

Dimensions

article no.	dimensions in mm	A	B	I	K	R	U	V	W	volume*
8300 CWVVK	1650 × 750 × 420	1650	750	1170	455	375	540	1450	650	92 litres
8310 CWVVK	1750 × 800 × 420	1750	800	1270	505	400	590	1550	700	122 litres
8320 CWVVK	1850 × 850 × 420	1850	850	1370	555	425	640	1650	750	155 litres
8325 CWVVK	1950 × 950 × 420	1950	950	1470	625	475	735	1750	845	205 litres

*bath capacity = volume + 70 litres human water displacement.

Dimensions

PG	article no.	dimensions in mm	weight (net)	White 000 → cover	coloured → cover
CO	8300 CWVVK	1650 × 750 × 420	74 kg	4.098 €	4.865 €
CO	8310 CWVVK	1750 × 800 × 420	88 kg	4.303 €	5.070 €
CO	8320 CWVVK	1850 × 850 × 420	92 kg	4.507 €	5.274 €
CO	8325 CWVVK	1950 × 950 × 420	97 kg	4.917 €	5.684 €

Please note the ordering information on page 5.

Extras

PG	code	description	see	price
EX	AS	BetteAnti-Slip Sense*	p. 273	190 €
EX	PLUS	BetteGlaze® Plus	p. 274	160 €
EX	HLZ	Tapholes and drilling as per special drawing	p. 276	234 €
IN		Whirlsystems	p. 378	

*Not available with Glaze® Plus. Only available in combination with White (000).

Accessories

PG	article no.	description	see	price
IN	B090-901	Grip B090, chrome*	p. 367	178 €
IN	B120-901	Grip B120, chrome*	p. 368	178 €

* The baths need to be ordered with the ending 1GR.

Waste- and overflow fittings

PG	article no.	description	see	Chrome 901	White 000
IN	B601-	Waste- and overflow fitting Silhouette Ø 52 mm, 725 mm	p. 313	214 €	245 €
IN	B605-	Waste, overflow and filling unit Silhouette Ø 52 mm, 725 mm	p. 317	606 €	692 €
IN	B625-	Waste- and overflow fitting Plus 5 Silhouette Ø 52 mm, 1070 mm	p. 327	346 €	
IN	B626-	Waste, overflow and filling unit Plus 5 Silhouette Ø 52 mm, 1070 mm	p. 332	731 €	

Technical information and prices of additional BetteExtras on page 270. You will find the colours in the cover. Subject to alteration and production tolerance. Prices excluding VAT.

BetteStarlet II

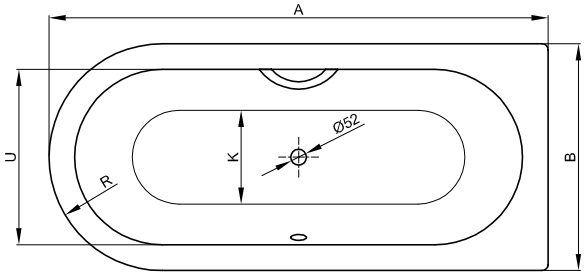

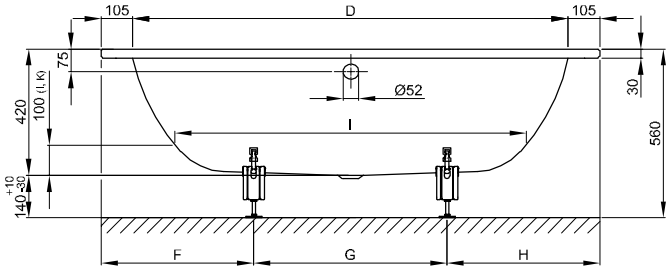

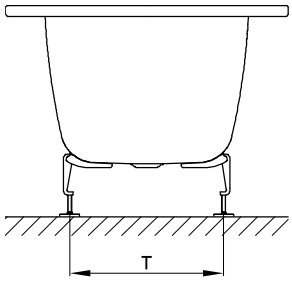

Information

For professional installation we recommend the use of the original bath feet B23-1500.

Scope of delivery

Including noise-reducing pads.

Dimensions

article no.	dimensions in mm	A	B	D	F	G	H	I	K	R	T	U	volume*
8330	1650 × 750 × 420	1650	750	1440	500	650	500	1170	455	375	425	540	92 litres
8340	1750 × 800 × 420	1750	800	1540	510	730	510	1270	505	400	480	590	122 litres
8350	1850 × 850 × 420	1850	850	1640	550	750	550	1370	555	425	485	640	155 litres

*bath capacity = volume + 70 litres human water displacement.

Dimensions

PG	article no.	dimensions in mm	weight (net)	pcs/pallet	White 000 → cover	coloured → cover
CO	8330	1650 × 750 × 420	48 kg	6	2.007 €	2.185 €
CO	8340	1750 × 800 × 420	48 kg	6	2.107 €	2.285 €
CO	8350	1850 × 850 × 420	53.8 kg	8	2.208 €	2.386 €

Extras

PG	code	description	see	price
EX	AS	BetteAnti-Slip Sense*	p. 273	190 €
EX	PLUS	BetteGlaze® Plus	p. 274	160 €
EX	HLZ	Tapholes and drilling as per special drawing	p. 276	234 €
EX		Profi Corner	p. 284	from 404 €
IN		Whirlsystems	p. 378	

* Not available with Glaze® Plus. Only available in combination with White (000).

Accessories

PG	article no.	description	see	price
IN	B23-1500	Bath feet universal	p. 342	75 €
IN	B090-901	Grip B090, chrome*	p. 367	178 €
IN	B120-901	Grip B120, chrome*	p. 368	178 €
IN	B57-0407	Bath divider 3300 × 120 mm	p. 359	33 €
IN	Z0008669	Wall Brackets	p. 360	40 €

* The baths need to be ordered with the ending 1GR.

Waste- and overflow fittings

PG	article no.	description	see	Chrome 901	White 000
IN	B602-	Waste- and overflow fitting Ø 52 mm, 725 mm	p. 314	154 €	177 €
IN	B606-	Waste, overflow and filling unit Ø 52 mm, 725 mm	p. 318	423 €	514 €
IN	B619-	Waste- and overflow fitting Plus 5, Ø 52 mm, 1070 mm	p. 325	267 €	
IN	B620-	Waste, overflow and filling unit Plus 5, Ø 52 mm, 1070 mm	p. 330	529 €	

Technical information and prices of additional BetteExtras on page 270. You will find the colours in the cover. Subject to alteration and production tolerance. Prices excluding VAT.

BetteStarlet IV

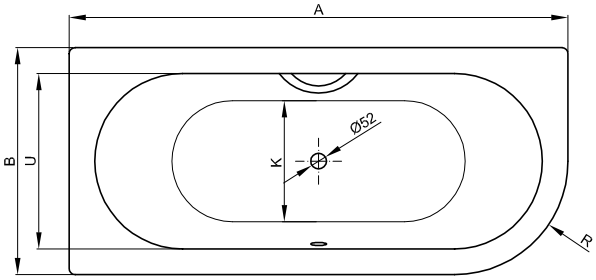

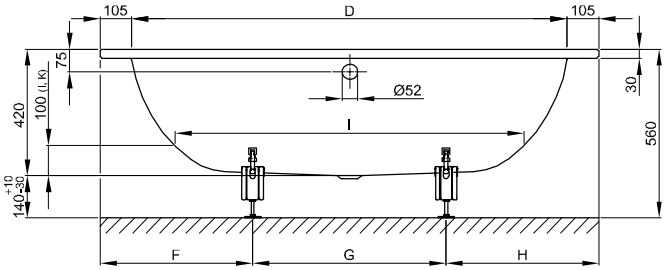

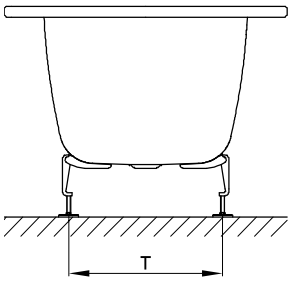

Information

For professional installation we recommend the use of the original bath feet B23-1500.

Scope of delivery

Including noise-reducing pads.

Dimensions

article no.	dimensions in mm	A	B	D	F	G	H	I	K	R	T	U	volume*
6650	1650 × 750 × 420	1650	750	1440	500	650	500	1170	455	375	425	540	92 litres
6660	1750 × 800 × 420	1750	800	1540	550	650	550	1270	505	400	480	590	122 litres
6670	1850 × 850 × 420	1850	850	1640	550	750	550	1370	555	425	485	640	155 litres

*bath capacity = volume + 70 litres human water displacement.

Dimensions

PG	article no.	dimensions in mm	weight (net)	pcs/pallet	White 000 → cover	coloured → cover
CO	6650	1650 × 750 × 420	44 kg	6	2.007 €	2.185 €
CO	6660	1750 × 800 × 420	49 kg	6	2.107 €	2.285 €
CO	6670	1850 × 850 × 420	54 kg	6	2.208 €	2.386 €

Extras

PG	code	description	see	price
EX	AS	BetteAnti-Slip Sense*	p. 273	190 €
EX	PLUS	BetteGlaze® Plus	p. 274	160 €
EX	HLZ	Tapholes and drilling as per special drawing	p. 276	234 €
EX		Profi Corner	p. 284	from 404 €
IN		Whirlsystems	p. 378	

* Not available with Glaze® Plus. Only available in combination with White (000).

Accessories

PG	article no.	description	see	price
IN	B23-1500	Bath feet universal	p. 342	75 €
IN	B090-901	Grip B090, chrome*	p. 367	178 €
IN	B120-901	Grip B120, chrome*	p. 368	178 €
IN	B57-0372	Sealing System for baths	p. 356	106 €
IN	B57-0407	Bath divider 3300 × 120 mm	p. 359	33 €
IN	Z0008669	Wall Brackets	p. 360	40 €

* The baths need to be ordered with the ending 1GR.

Waste- and overflow fittings

PG	article no.	description	see	Chrome 901	White 000
IN	B602-	Waste- and overflow fitting Ø 52 mm, 725 mm	p. 314	154 €	177 €
IN	B606-	Waste, overflow and filling unit Ø 52 mm, 725 mm	p. 318	423 €	514 €
IN	B619-	Waste- and overflow fitting Plus 5, Ø 52 mm, 1070 mm	p. 325	267 €	
IN	B620-	Waste, overflow and filling unit Plus 5, Ø 52 mm, 1070 mm	p. 330	529 €	

Technical information and prices of additional BetteExtras on page 270. You will find the colours in the cover. Subject to alteration and production tolerance. Prices excluding VAT.

BetteStarlet IV Silhouette

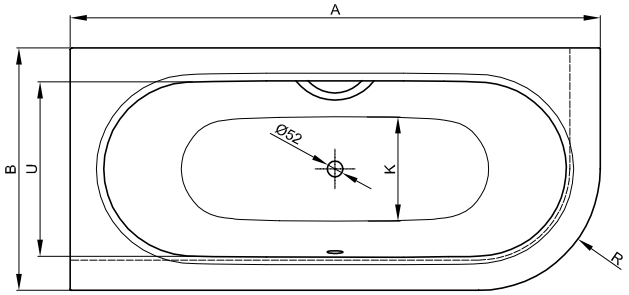

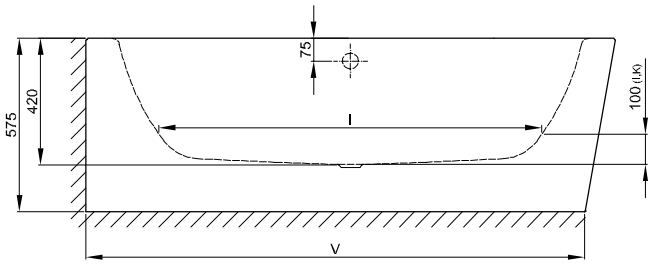

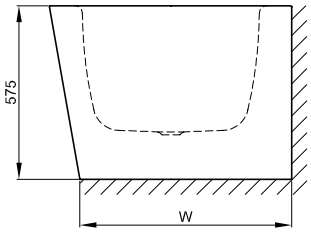

Information

If this bath is ordered with waste fitting this will come prefitted. If ordered with Trio waste the bath comes with prefitted Sanfix tube for water supply. A flexible drain pipe is generally included in delivery.

If combined with BetteWhirlsystems it is necessary to provide an adequate air supply under the bath.

Scope of delivery

Including noise-reducing pads.

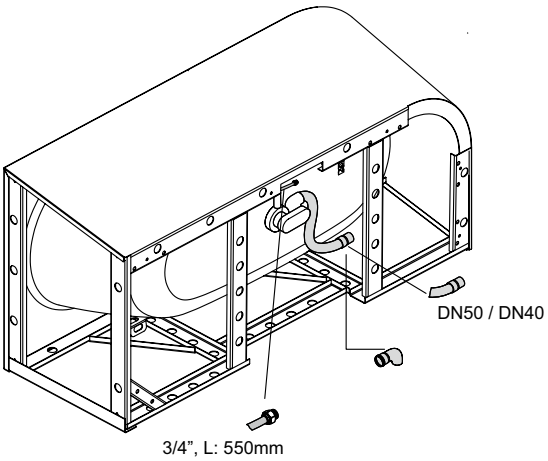

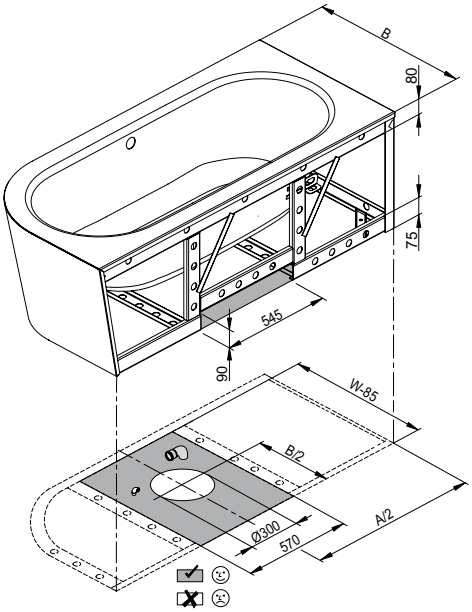

Adequate position to connect the drainage

Dimensions

article no.	dimensions in mm	A	B	I	K	R	U	V	W	volume*
6650 CERVK	1650 × 750 × 420	1650	750	1170	455	375	540	1550	650	92 litres
6660 CERVK	1750 × 800 × 420	1750	800	1270	505	400	590	1650	700	122 litres
6670 CERVK	1850 × 850 × 420	1850	850	1370	555	425	640	1750	750	155 litres
6677 CERVK	1950 × 950 × 420	1950	950	1470	625	475	735	1850	850	205 litres

*bath capacity = volume + 70 litres human water displacement.

Dimensions

PG	article no.	dimensions in mm	weight (net)	White 000 → cover	coloured → cover
CO	6650 CERVK	1650 × 750 × 420	80 kg	3.970 €	4.737 €
CO	6660 CERVK	1750 × 800 × 420	85 kg	4.168 €	4.935 €
CO	6670 CERVK	1850 × 850 × 420	90 kg	4.367 €	5.134 €
CO	6677 CERVK	1950 × 950 × 420	100 kg	5.071 €	5.838 €

Please note the ordering information on page 5.

Extras

PG	code	description	see	price
EX	AS	BetteAnti-Slip Sense*	p. 273	190 €
EX	PLUS	BetteGlaze® Plus	p. 274	160 €
EX	HLZ	Tapholes and drilling as per special drawing	p. 276	234 €
IN		Whirlsystems	p. 378	

* Not available with Glaze® Plus. Only available in combination with White (000).

Accessories

PG	article no.	description	see	price
IN	B090-901	Grip B090, chrome*	p. 367	178 €
IN	B120-901	Grip B120, chrome*	p. 368	178 €

* The baths need to be ordered with the ending 1GR.

Waste- and overflow fittings

PG	article no.	description	see	Chrome 901	White 000
IN	B601-	Waste- and overflow fitting Silhouette Ø 52 mm, 725 mm	p. 313	214 €	245 €
IN	B605-	Waste, overflow and filling unit Silhouette Ø 52 mm, 725 mm	p. 317	606 €	692 €
IN	B625-	Waste- and overflow fitting Plus 5 Silhouette Ø 52 mm, 1070 mm	p. 327	346 €	
IN	B626-	Waste, overflow and filling unit Plus 5 Silhouette Ø 52 mm, 1070 mm	p. 332	731 €	

Technical information and prices of additional BetteExtras on page 270. You will find the colours in the cover. Subject to alteration and production tolerance. Prices excluding VAT.

BetteStarlet V

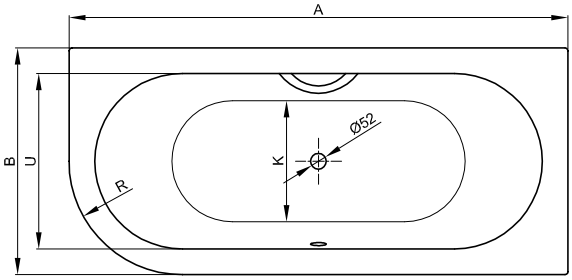

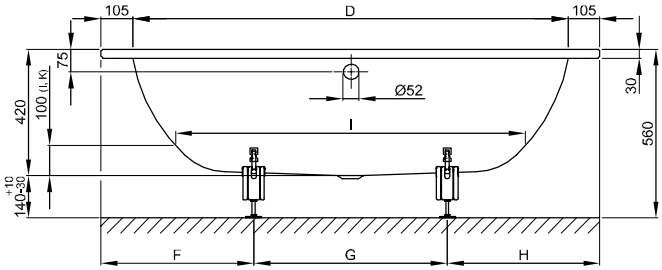

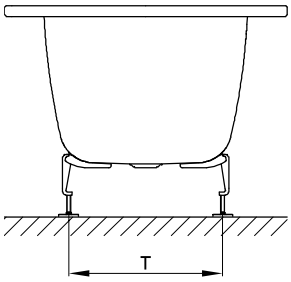

Information

For professional installation we recommend the use of the original bath feet B23-1500.

Scope of delivery

Including noise-reducing pads.

Dimensions

article no.	dimensions in mm	A	B	D	F	G	H	I	K	R	T	U	volume*
6680	1650 × 750 × 420	1650	750	1440	505	640	505	1170	455	375	425	540	92 litres
6690	1750 × 800 × 420	1750	800	1540	550	650	550	1270	505	400	480	590	122 litres
6700	1850 × 850 × 420	1850	850	1640	550	750	550	1370	555	425	485	640	155 litres

*bath capacity = volume + 70 litres human water displacement.

Dimensions

PG	article no.	dimensions in mm	weight (net)	pcs/pallet	White 000 → cover	coloured → cover
CO	6680	1650 × 750 × 420	44.3 kg	6	2.007 €	2.185 €
CO	6690	1750 × 800 × 420	48 kg	6	2.107 €	2.285 €
CO	6700	1850 × 850 × 420	48 kg	6	2.208 €	2.386 €

Extras

PG	code	description	see	price
EX	AS	BetteAnti-Slip Sense*	p. 273	190 €
EX	PLUS	BetteGlaze® Plus	p. 274	160 €
EX	HLZ	Tapholes and drilling as per special drawing	p. 276	234 €
EX		Profi Corner	p. 284	from 404 €
IN		Whirlsystems	p. 378	

*Not available with Glaze® Plus. Only available in combination with White (000).

Accessories

PG	article no.	description	see	price
IN	B23-1500	Bath feet universal	p. 342	75 €
IN	B090-901	Grip B090, chrome*	p. 367	178 €
IN	B120-901	Grip B120, chrome*	p. 368	178 €
IN	B57-0372	Sealing System for baths	p. 356	106 €
IN	B57-0407	Bath divider 3300 × 120 mm	p. 359	33 €
IN	Z0008669	Wall Brackets	p. 360	40 €

* The baths need to be ordered with the ending 1GR.

Waste- and overflow fittings

PG	article no.	description	see	Chrome 901	White 000
IN	B602-	Waste- and overflow fitting Ø 52 mm, 725 mm	p. 314	154 €	177 €
IN	B606-	Waste, overflow and filling unit Ø 52 mm, 725 mm	p. 318	423 €	514 €
IN	B619-	Waste- and overflow fitting Plus 5, Ø 52 mm, 1070 mm	p. 325	267 €	
IN	B620-	Waste, overflow and filling unit Plus 5, Ø 52 mm, 1070 mm	p. 330	529 €	

Technical information and prices of additional BetteExtras on page 270. You will find the colours in the cover. Subject to alteration and production tolerance. Prices excluding VAT.

BetteStarlet V Silhouette

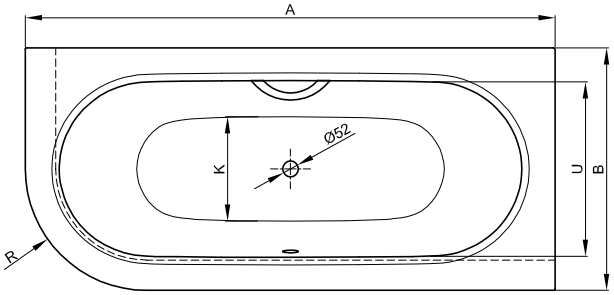

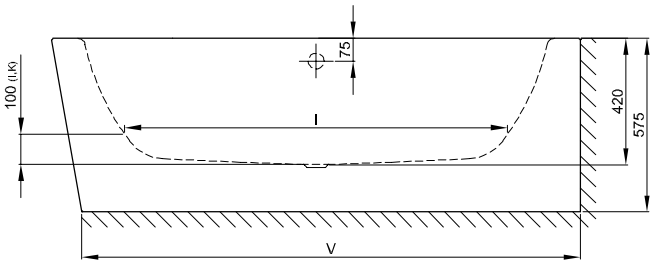

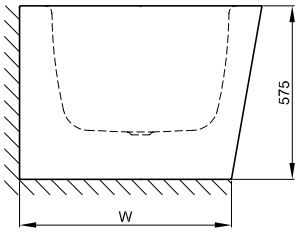

Information

If this bath is ordered with waste fitting this will come prefitted. If ordered with Trio waste the bath comes with prefitted Sanfix tube for water supply. A flexible drain pipe is generally included in delivery.

If combined with BetteWhirlsystems it is necessary to provide an adequate air supply under the bath.

Scope of delivery

Including noise-reducing pads.

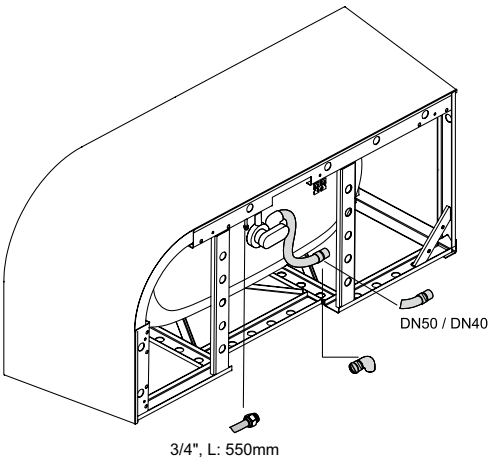

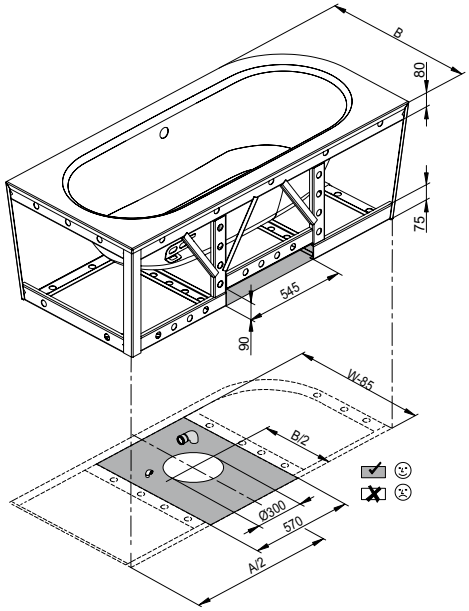

Adequate position to connect the drainage

Dimensions

article no.	dimensions in mm	A	B	I	K	R	U	V	W	volume*
6680 CELVK	1650 × 750 × 420	1650	750	1170	455	375	540	1550	650	92 litres
6690 CELVK	1750 × 800 × 420	1750	800	1270	505	400	590	1650	700	122 litres
6700 CELVK	1850 × 850 × 420	1850	850	1370	555	425	640	1750	750	155 litres
6720 CELVK	1950 × 950 × 420	1950	950	1470	625	475	735	1850	850	205 litres

*bath capacity = volume + 70 litres human water displacement.

Dimensions

PG	article no.	dimensions in mm	weight (net)	White 000 → cover	coloured → cover
CO	6680 CELVK	1650 × 750 × 420	80 kg	3.970 €	4.737 €
CO	6690 CELVK	1750 × 800 × 420	85 kg	4.168 €	4.935 €
CO	6700 CELVK	1850 × 850 × 420	90 kg	4.367 €	5.134 €
CO	6720 CELVK	1950 × 950 × 420	101 kg	5.071 €	5.838 €

Please note the ordering information on page 5.

Extras

PG	code	description	see	price
EX	AS	BetteAnti-Slip Sense*	p. 273	190 €
EX	PLUS	BetteGlaze® Plus	p. 274	160 €
EX	HLZ	Tapholes and drilling as per special drawing	p. 276	234 €
IN		Whirlsystems	p. 378	

*Not available with Glaze® Plus. Only available in combination with White (000).

Accessories

PG	article no.	description	see	price
IN	B090-901	Grip B090, chrome*	p. 367	178 €
IN	B120-901	Grip B120, chrome*	p. 368	178 €

* The baths need to be ordered with the ending 1GR.

Waste- and overflow fittings

PG	article no.	description	see	Chrome 901	White 000
IN	B601-	Waste- and overflow fitting Silhouette Ø 52 mm, 725 mm	p. 313	214 €	245 €
IN	B605-	Waste, overflow and filling unit Silhouette Ø 52 mm, 725 mm	p. 317	606 €	692 €
IN	B625-	Waste- and overflow fitting Plus 5 Silhouette Ø 52 mm, 1070 mm	p. 327	346 €	
IN	B626-	Waste, overflow and filling unit Plus 5 Silhouette Ø 52 mm, 1070 mm	p. 332	731 €	

Technical information and prices of additional BetteExtras on page 270. You will find the colours in the cover. Subject to alteration and production tolerance. Prices excluding VAT.

BetteStarlet Flair Oval

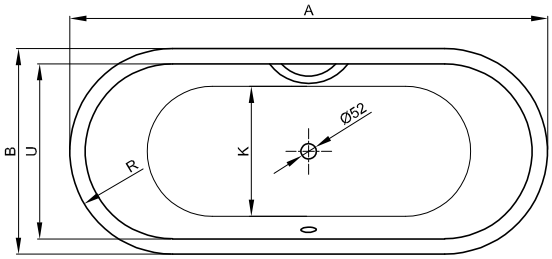

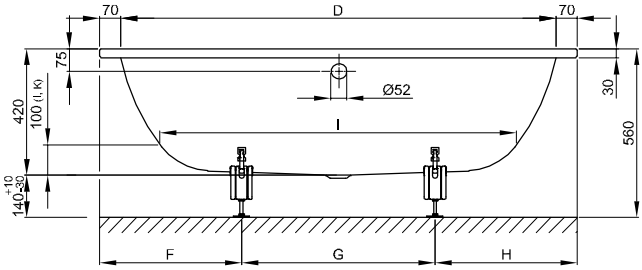

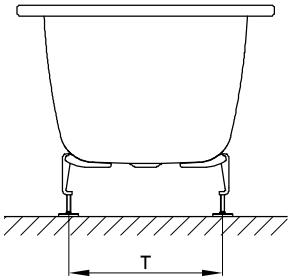

Information

For professional installation we recommend the use of the original bath feet B23-1500.

Scope of delivery

Including noise-reducing pads.

Dimensions

article no.	dimensions in mm	A	B	D	F	G	H	I	K	R	T	U	volume*
8772	1580 × 680 × 420	1580	680	1440	460	660	460	1170	455	340	495	540	92 litres
8773	1680 × 730 × 420	1680	730	1540	490	700	490	1270	505	365	425	590	122 litres
8774	1780 × 780 × 420	1780	780	1640	530	720	530	1370	555	390	480	640	155 litres
8775	1880 × 880 × 420	1880	880	1740	555	770	555	1465	625	440	485	740	205 litres

*bath capacity = volume + 70 litres human water displacement.

Dimensions

PG	article no.	dimensions in mm	weight (net)	pcs/pallet	White 000 → cover	coloured → cover
CO	8772	1580 × 680 × 420	39.6 kg	14	1.568 €	1.746 €
CO	8773	1680 × 730 × 420	43.4 kg	14	1.568 €	1.746 €
CO	8774	1780 × 780 × 420	47.9 kg	14	1.646 €	1.824 €
CO	8775	1880 × 880 × 420	51.5 kg	14	1.725 €	1.903 €

Extras

PG	code	description	see	price
EX	AS	BetteAnti-Slip Sense*	p. 273	190 €
EX	PLUS	BetteGlaze® Plus	p. 274	160 €
IN		Whirlsystems	p. 378	

*Not available with Glaze® Plus. Only available in combination with White (000).

Accessories

PG	article no.	description	see	price
IN	B23-1500	Bath feet universal	p. 342	75 €
IN	B090-901	Grip B090, chrome*	p. 367	178 €
IN	B120-901	Grip B120, chrome*	p. 368	178 €
IN	B57-0407	Bath divider 3300 × 120 mm	p. 359	33 €
IN	Z0008669	Wall Brackets	p. 360	40 €

* The baths need to be ordered with the ending 1GR.

Waste- and overflow fittings

PG	article no.	description	see	Chrome 901	White 000
IN	B602-	Waste- and overflow fitting Ø 52 mm, 725 mm	p. 314	154 €	177 €
IN	B603-	Waste- and overflow fitting Ø 52 mm, 1070 mm → 1880 × 880 mm	p. 315	196 €	233 €
IN	B606-	Waste, overflow and filling unit Ø 52 mm, 725 mm	p. 318	423 €	514 €
IN	B607-	Waste, overflow and filling unit Ø 52 mm, 1070 mm → 1880 × 880 mm	p. 319	469 €	552 €
IN	B619-	Waste- and overflow fitting Plus 5, Ø 52 mm, 1070 mm	p. 325	267 €	
IN	B620-	Waste, overflow and filling unit Plus 5, Ø 52 mm, 1070 mm	p. 330	529 €	

Technical information and prices of additional BetteExtras on page 270. You will find the colours in the cover. Subject to alteration and production tolerance. Prices excluding VAT.

BetteStarlet Hexa

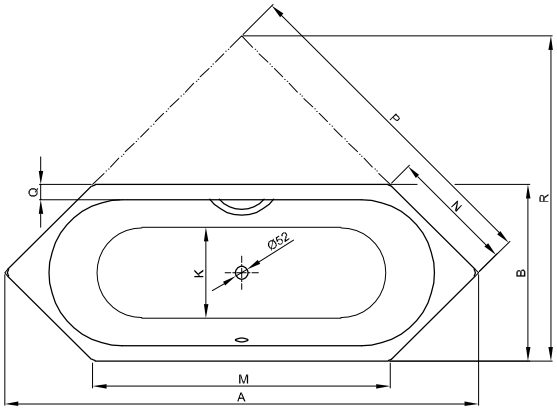

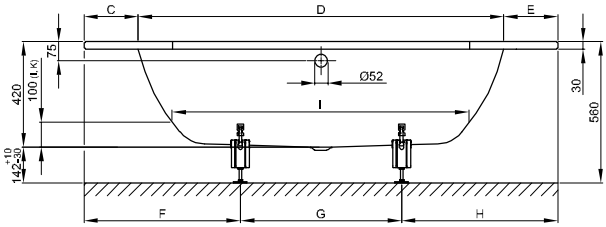

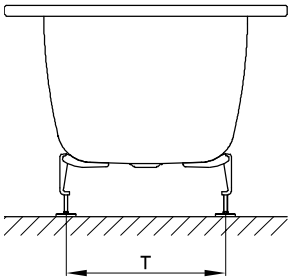

Information

For professional installation we recommend the use of the original bath feet B23-1500.

Scope of delivery

Including noise-reducing pads.

Dimensions

article no.	dimensions in mm	A	B	C	D	E	F	G	H	I	K	M	N	P	Q	R	T	volume*
2040	1880 × 700 × 420	1880	700	220	1440	220	635	610	635	1170	455	1180	495	1330	80	1290	425	92 litres
2060	2000 × 750 × 420	2000	750	230	1540	230	637	725	637	1270	505	1250	530	1415	85	1375	480	122 litres
2080	2100 × 800 × 420	2100	800	230	1640	230	687	726	687	1370	555	1300	565	1485	85	1450	485	155 litres

*bath capacity = volume + 70 litres human water displacement.

Dimensions

PG	article no.	dimensions in mm	weight (net)	White 000 → cover	coloured → cover
CO	2040	1880 × 700 × 420	43 kg	2.108 €	2.286 €
CO	2060	2000 × 750 × 420	48 kg	2.491 €	2.669 €
CO	2080	2100 × 800 × 420	57 kg	2.491 €	2.669 €

Extras

PG	code	description	see	price
EX	AS	BetteAnti-Slip Sense*	p. 273	190 €
EX	PLUS	BetteGlaze® Plus	p. 274	160 €
EX	HLZ	Tapholes and drilling as per special drawing	p. 276	234 €
IN		Whirlsystems	p. 378	

*Not available with Glaze® Plus. Only available in combination with White (000).

Accessories

PG	article no.	description	see	price
IN	B23-1500	Bath feet universal	p. 342	75 €
IN	B090-901	Grip B090, chrome*	p. 367	178 €
IN	B120-901	Grip B120, chrome*	p. 368	178 €
IN	B57-0407	Bath divider 3300 × 120 mm	p. 359	33 €
IN	Z0008669	Wall Brackets	p. 360	40 €

* The baths need to be ordered with the ending 1GR.

Waste- and overflow fittings

PG	article no.	description	see	Chrome 901	White 000
IN	B602-	Waste- and overflow fitting Ø 52 mm, 725 mm	p. 314	154 €	177 €
IN	B606-	Waste, overflow and filling unit Ø 52 mm, 725 mm	p. 318	423 €	514 €
IN	B619-	Waste- and overflow fitting Plus 5, Ø 52 mm, 1070 mm	p. 325	267 €	
IN	B620-	Waste, overflow and filling unit Plus 5, Ø 52 mm, 1070 mm	p. 330	529 €	

Technical information and prices of additional BetteExtras on page 270. You will find the colours in the cover. Subject to alteration and production tolerance. Prices excluding VAT.

BetteStarlet Oval

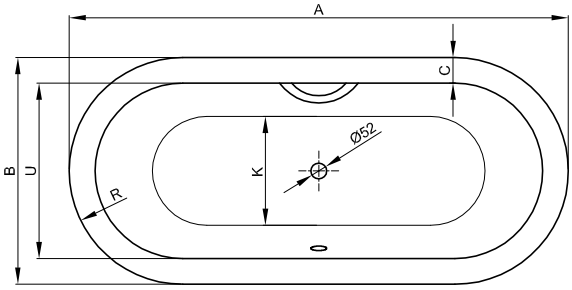

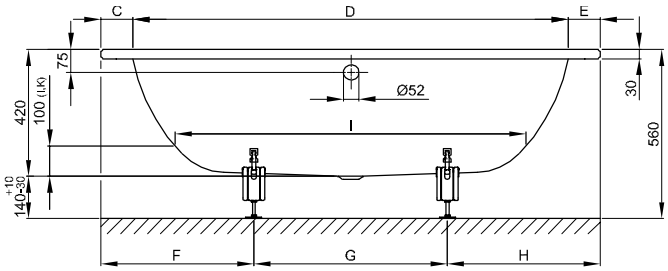

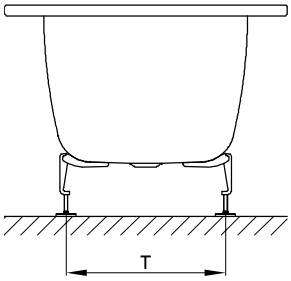

Information

For professional installation we recommend the use of the original bath feet B23-1500.

Scope of delivery

Including noise-reducing pads.

Dimensions

article no.	dimensions in mm	A	B	C	D	E	F	G	H	I	K	R	T	U	volume*
2700	1500 × 800 × 420	1500	800	80	1340	80	540	420	540	1070	555	400	495	640	107 litres
2720	1650 × 750 × 420	1650	750	105	1440	105	520	610	520	1170	455	375	425	540	92 litres
2680	1750 × 800 × 420	1750	800	105	1540	105	510	730	510	1270	505	400	480	590	122 litres
2740	1850 × 850 × 420	1850	850	105	1640	105	560	730	560	1370	555	425	485	640	155 litres
2745	1950 × 950 × 420	1950	950	105	1740	105	590	770	590	1465	625	475	560	740	205 litres

*bath capacity = volume + 70 litres human water displacement.

Dimensions

PG	article no.	dimensions in mm	weight (net)	pcs/pallet	White 000 → cover	coloured → cover
CO	2700	1500 × 800 × 420	36.6 kg	9	1.464 €	1.642 €
CO	2720	1650 × 750 × 420	48 kg	12	1.464 €	1.642 €
CO	2680	1750 × 800 × 420	47.7 kg	14	1.537 €	1.715 €
CO	2740	1850 × 850 × 420	50.5 kg	14	1.610 €	1.788 €
CO	2745	1950 × 950 × 420	54 kg	12	1.882 €	2.060 €

Extras

PG	code	description	see	price
EX	AS	BetteAnti-Slip Sense*	p. 273	190 €
EX	PLUS	BetteGlaze® Plus	p. 274	160 €
EX	HLZ	Tapholes and drilling as per special drawing	p. 276	234 €
IN		Whirlsystems	p. 378	

*Not available with Glaze® Plus. Only available in combination with White (000).

Accessories

PG	article no.	description	see	price
IN	B23-1500	Bath feet universal	p. 342	75 €
IN	B090-901	Grip B090, chrome*	p. 367	178 €
IN	B120-901	Grip B120, chrome*	p. 368	178 €
IN	B57-0407	Bath divider 3300 × 120 mm	p. 359	33 €
IN	Z0008669	Wall Brackets	p. 360	40 €

* The baths need to be ordered with the ending 1GR.

Waste- and overflow fittings

PG	article no.	description	see	Chrome 901	White 000
IN	B602-	Waste- and overflow fitting Ø 52 mm, 725 mm	p. 314	154 €	177 €
IN	B603-	Waste- and overflow fitting Ø 52 mm, 1070 mm → 1950 × 950 mm	p. 315	196 €	233 €
IN	B606-	Waste, overflow and filling unit Ø 52 mm, 725 mm	p. 318	423 €	514 €
IN	B607-	Waste, overflow and filling unit Ø 52 mm, 1070 mm → 1950 × 950 mm	p. 319	469 €	552 €
IN	B619-	Waste- and overflow fitting Plus 5, Ø 52 mm, 1070 mm	p. 325	267 €	
IN	B620-	Waste, overflow and filling unit Plus 5, Ø 52 mm, 1070 mm	p. 330	529 €	

Technical information and prices of additional BetteExtras on page 270. You will find the colours in the cover. Subject to alteration and production tolerance. Prices excluding VAT.

BetteStarlet Oval Silhouette

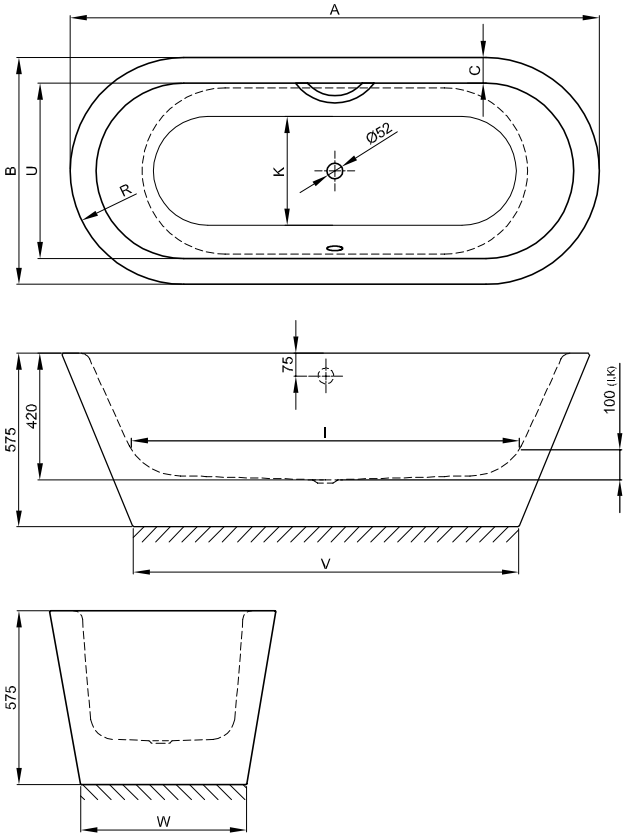

Information

If this bath is ordered with waste fitting this will come prefitted. If ordered with Trio waste the bath comes with prefitted Sanfix tube for water supply. A flexible drain pipe is generally included in delivery.

If combined with BetteWhirlsystems it is necessary to provide an adequate air supply under the bath.

Scope of delivery

Including noise-reducing pads.

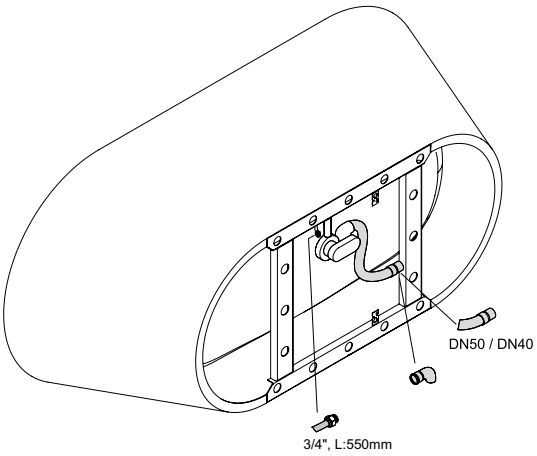

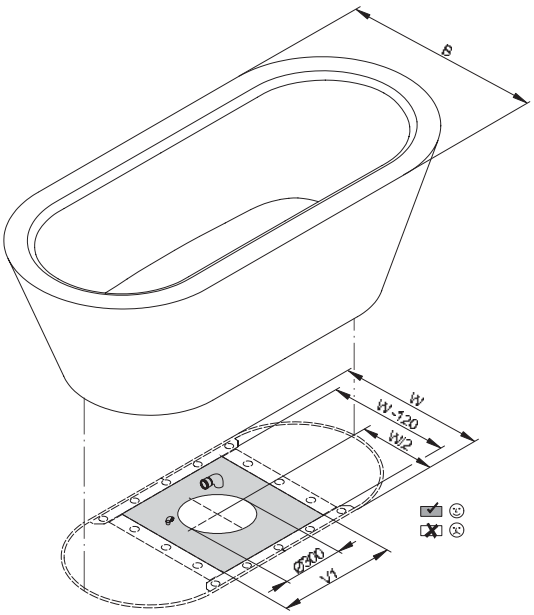

Adequate position to connect the drainage

Dimensions

article no.	dimensions in mm	A	B	C	I	K	R	U	V	V1	W	volume*
2700 CFXXK	1500 × 800 × 420	1500	800	80	1070	555	400	640	1040	300	600	107 litres
2720 CFXXK	1650 × 750 × 420	1650	750	105	1170	455	375	540	1187	440	548	92 litres
2680 CFXXK	1750 × 800 × 420	1750	800	105	1270	505	400	590	1287	460	598	122 litres
2740 CFXXK	1850 × 850 × 420	1850	850	105	1370	555	425	640	1387	530	648	155 litres
2745 CFXXK	1950 × 950 × 420	1950	950	105	1470	625	475	740	1487	525	745	205 litres

*bath capacity = volume + 70 litres human water displacement.

Dimensions

PG	article no.	dimensions in mm	weight (net)	White 000 → cover	coloured → cover	Bicolour → cover
CO	2700 CFXXK	1500 × 800 × 420	85 kg	4.354 €	5.121 €	6.596 €
CO	2720 CFXXK	1650 × 750 × 420	82.8 kg	4.354 €	5.121 €	6.596 €
CO	2680 CFXXK	1750 × 800 × 420	90 kg	4.571 €	5.338 €	6.813 €
CO	2740 CFXXK	1850 × 850 × 420	88 kg	4.789 €	5.556 €	7.031 €
CO	2745 CFXXK	1950 × 950 × 420	97.5 kg	5.532 €	6.299 €	7.774 €

Please note the ordering information on page 5.

Extras

PG	code	description	see	price
EX	AS	BetteAnti-Slip Sense*	p. 273	190 €
EX	PLUS	BetteGlaze® Plus	p. 274	160 €
EX	HLZ	Tapholes and drilling as per special drawing	p. 276	234 €
IN		Whirlsystems	p. 378	

*Not available with Glaze® Plus. Only available in combination with White (000).

Accessories

PG	article no.	description	see	price
IN	B090-901	Grip B090, chrome*	p. 367	178 €
IN	B120-901	Grip B120, chrome*	p. 368	178 €

* The baths need to be ordered with the ending 1GR.

Waste- and overflow fittings

PG	article no.	description	see	Chrome 901	White 000
IN	B601-	Waste- and overflow fitting Silhouette Ø 52 mm, 725 mm	p. 313	214 €	245 €
IN	B605-	Waste, overflow and filling unit Silhouette Ø 52 mm, 725 mm	p. 317	606 €	692 €
IN	B625-	Waste- and overflow fitting Plus 5 Silhouette Ø 52 mm, 1070 mm	p. 327	346 €	
IN	B626-	Waste, overflow and filling unit Plus 5 Silhouette Ø 52 mm, 1070 mm	p. 332	731 €	

Technical information and prices of additional BetteExtras on page 270. You will find the colours in the cover. Subject to alteration and production tolerance. Prices excluding VAT.

BetteStep

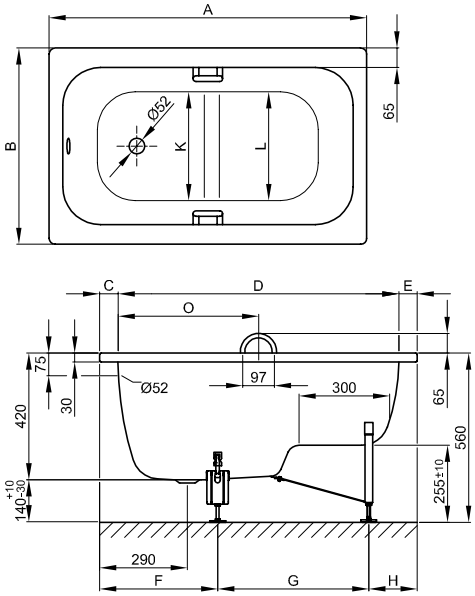

Information

The upper edge of the grips exceeds the bath by 65 mm.

For professional installation we recommend the use of the original bath feet B23-1520.

If the bath is to be fitted under a panel, please contact us for individual cut-out details.

Scope of delivery

Including noise-reducing pads.

Dimensions

article no.	dimensions in mm	A	B	C	D	E	F	G	H	K	L	O	volume*
1050	1050 × 650 × 420	1050	650	60	930	60	390	500	160	450	475	465	36 litres
1060	1180 × 730 × 420	1180	730	67	1046	67	420	610	150	510	555	530	66 litres

*bath capacity = volume + 70 litres human water displacement.

Dimensions

PG	article no.	dimensions in mm	weight (net)	pcs/pallet	White 000 → cover	coloured → cover
BA	1050	1050 × 650 × 420	23.4 kg	14	765 €	943 €
BA	1060	1180 × 730 × 420	27.8 kg	14	765 € ☗	943 €

Extras

PG	code	description	see	price
EX	AS	BetteAnti-Slip Sense*	p. 273	190 €
EX	PLUS	BetteGlaze® Plus	p. 274	160 €
EX	HLZ	Tapholes and drilling as per special drawing	p. 276	234 €
EX		BetteUpstand	p. 280	from 424 €
EX		Special size	p. 286	404 €
EX		Profi Corner	p. 284	from 404 €

*Not available with Glaze® Plus. Only available in combination with White (000).

Accessories

PG	article no.	description	see	price
IN	B23-1520	Bath feet BetteStep	p. 342	97 €
IN	B060-901	Grips B060, chrome*	p. 366	305 €
IN	B57-0372	Sealing System for baths	p. 356	106 €
IN	B57-0407	Bath divider 3300 × 120 mm	p. 359	33 €
IN	Z0008669	Wall Brackets	p. 360	40 €

* The baths need to be ordered with the ending 2GR.

Waste- and overflow fittings

PG	article no.	description	see	Chrome 901	White 000
IN	B600-	Waste- and overflow fitting Ø 52 mm, 560 mm	p. 312	150 €	180 €
IN	B604-	Waste, overflow and filling unit Ø 52 mm, 560 mm	p. 316	403 €	477 €
IN	B617-	Waste- and overflow fitting Plus 5, Ø 52 mm, 560 mm	p. 324	234 €	
IN	B618-	Waste, overflow and filling unit Plus 5, Ø 52 mm, 560 mm	p. 329	456 €	
IN	B629-	Waste- and overflow fitting Simplex Ø 52 mm, 560 mm	p. 336	90 €	

Technical information and prices of additional BetteExtras on page 270. You will find the colours in the cover. Subject to alteration and production tolerance. Prices excluding VAT.

LaBette

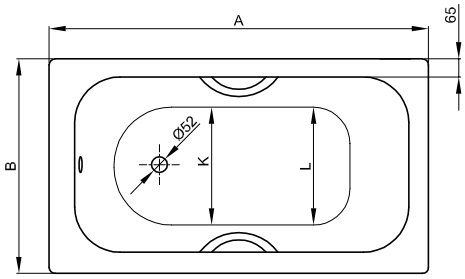

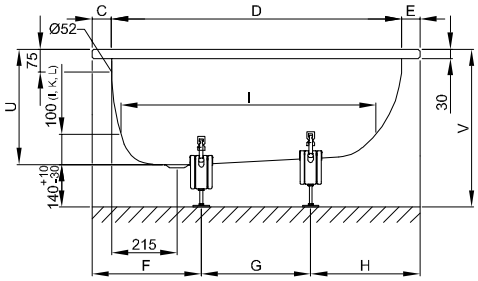

Information

For professional installation we recommend the use of the original bath feet B23-1500.

If the bath is to be fitted under a panel, please contact us for individual cut-out details.

Scope of delivery

Including noise-reducing pads.

Dimensions

article no.	dimensions in mm	A	B	C	D	E	F	G	H	I	K	L	U	V	volume*
1080	1080 × 730 × 380	1080	730	65	955	60	380	360	340	865	485	485	380	520	43 litres
1180	1180 × 730 × 380	1180	730	85	1030	65	370	460	350	945	525	510	380	520	52 litres
1200	1200 × 700 × 390	1200	700	85	1050	65	360	455	385	920	500	485	390	530	57 litres
1240	1240 × 700 × 420	1240	700	70	1105	65	390	420	430	925	475	475	420	560	73 litres
1300	1300 × 700 × 390	1300	700	85	1150	65	400	480	420	995	495	495	390	530	85 litres

*bath capacity = volume + 70 litres human water displacement.

Dimensions

PG	article no.	dimensions in mm	weight (net)	pcs/pallet	White 000 → cover	coloured → cover
BA	1080	1080 × 730 × 380	23.8 kg	14	803 €	981 €
BA	1180	1180 × 730 × 380	25 kg	14	803 €	981 €
BA	1200	1200 × 700 × 390	23 kg	10	803 € ☗	981 €
BA	1240	1240 × 700 × 420	23.9 kg	12	765 €	943 €
BA	1300	1300 × 700 × 390	26 kg	12	803 € ☗	981 €

Extras

PG	code	description	see	price
EX	AS	BetteAnti-Slip Sense*	p. 273	190 €
EX	PLUS	BetteGlaze® Plus	p. 274	160 €
EX	HLZ	Tapholes and drilling as per special drawing	p. 276	234 €
EX		BetteUpstand	p. 280	from 424 €
EX		Special size	p. 286	404 €
EX		Profi Corner	p. 284	from 404 €

*Not available with Glaze® Plus. Only available in combination with White (000).

Accessories

PG	article no.	description	see	price
IN	B23-1500	Bath feet universal	p. 342	75 €
IN	B080-901	Grips B080, chrome*	p. 366	224 €
IN	B122-901	Grips B122, chrome*	p. 368	233 €
IN	B57-0372	Sealing System for baths	p. 356	106 €
IN	B57-0407	Bath divider 3300 × 120 mm	p. 359	33 €
IN	Z0008669	Wall Brackets	p. 360	40 €

* The baths need to be ordered with the ending 2GR.

Waste- and overflow fittings

PG	article no.	description	see	Chrome 901	White 000
IN	B600-	Waste- and overflow fitting Ø 52 mm, 560 mm	p. 312	150 €	180 €
IN	B604-	Waste, overflow and filling unit Ø 52 mm, 560 mm	p. 316	403 €	477 €
IN	B617-	Waste- and overflow fitting Plus 5, Ø 52 mm, 560 mm	p. 324	234 €	
IN	B618-	Waste, overflow and filling unit Plus 5, Ø 52 mm, 560 mm	p. 329	456 €	
IN	B629-	Waste- and overflow fitting Simplex Ø 52 mm, 560 mm	p. 336	90 €	

Technical information and prices of additional BetteExtras on page 270. You will find the colours in the cover. Subject to alteration and production tolerance. Prices excluding VAT.

Showers

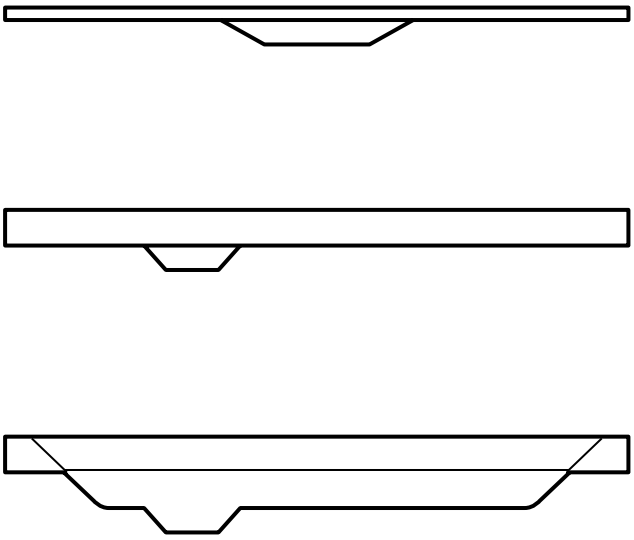

164 BetteAir
186 BetteCaro 35 mm, same shank length
190 BetteCorner 35 mm, different shank length
188 BetteCorner 35 mm, same shank length
192 BetteDelta 800 mm - 900 mm
194 BetteDelta 1000 mm - 1200 mm
166 BetteFlat
168 BetteFloor 800 mm - 1000 mm
170 BetteFloor 1100 mm - 1200 mm
172 BetteFloor 1300 mm - 1500 mm
174 BetteFloor 1600 mm - 1800 mm
176 BetteFloor Caro
178 BetteFloor Corner
180 BetteFloor Side 900 mm - 1200 mm
182 BetteFloor Side 1300 mm - 1500 mm
184 BetteFloor Side 1600 mm - 1800 mm
196 BetteQuinta 700 mm - 900 mm
198 BetteQuinta 1000 mm - 1200 mm
200 BetteSupra 700 mm - 850 mm
202 BetteSupra = 900 mm
204 BetteSupra 1000 mm - 1100 mm
206 BetteSupra 1200 mm - 1300 mm
208 BetteSupra 1400 mm - 1500 mm
210 BetteSupra 1600 mm - 1800 mm
212 BetteSupra with polystyrene support
214 BetteUltra 700 mm - 850 mm
216 BetteUltra = 900 mm
218 BetteUltra = 1000 mm
220 BetteUltra 1050 mm - 1100 mm
222 BetteUltra = 1200 mm
224 BetteUltra 1300 mm - 1400 mm
226 BetteUltra = 1500 mm
228 BetteUltra 1600 mm - 2000 mm
230 BetteUltra with polystyrene support

BetteAir

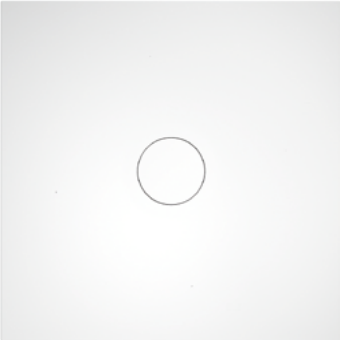

Illustration with pre-assembled Minimum support (T2).

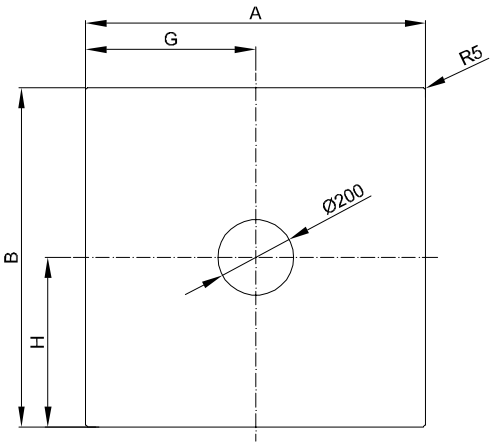

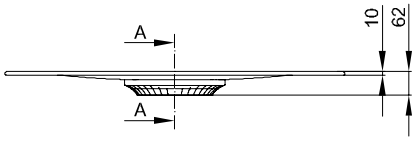

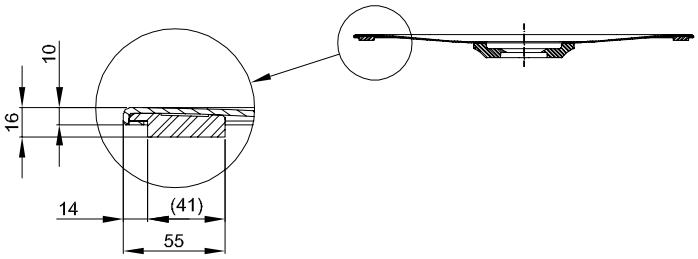

Illustration with pre-assembled Minimum support (T2).

Scope of delivery

Including sound-reducing separating foil.

Design: Tesseraux + Partner

Installation height

Waste fittings	from
B525-	117 mm
B524-	97 mm
B599-	62 mm

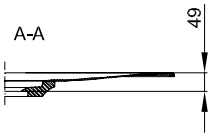

Dimensions

article no.	dimensions in mm	A	B	G	H
7350	900 × 900	900	900	450	450
7351	1000 × 900	1000	900	500	450
7352	1000 × 1000	1000	1000	500	500
7359	1100 × 900	1100	900	550	450
7360	1100 × 1000	1100	1000	550	500
7353	1200 x 800	1200	800	600	400
7354	1200 × 900	1200	900	600	450
7355	1200 × 1000	1200	1000	600	500
7361	1200 × 1200	1200	1200	600	600
7356	1400 × 900	1400	900	700	450
7357	1400 × 1000	1400	1000	700	500
7362	1500 × 900	1500	900	750	450
7363	1500 × 1000	1500	1000	750	500
7364	1600 × 900	1600	900	800	450
7365	1600 × 1000	1600	1000	800	500

Subject to alteration and production tolerance.

Dimensions

PG	article no.	dimensions in mm	weight (net)	pcs/pallet	White 000 Matt colours → cover	Glossy colours → cover
CO	7350	900 × 900	22.4 kg	9	890 €	985 €
CO	7351	1000 × 900	24.7 kg	9	1.023 €	1.118 €
CO	7352	1000 × 1000	27.1 kg	9	1.023 €	1.118 €
CO	7359	1100 × 900	26.8 kg	9	1.068 €	1.163 €
CO	7360	1100 × 1000	29.5 kg	9	1.068 €	1.163 €
CO	7353	1200 x 800	26.1 kg	9	1.157 €	1.252 €
CO	7354	1200 × 900	29 kg	9	1.157 €	1.252 €
CO	7355	1200 × 1000	32 kg	9	1.157 €	1.252 €
CO	7361	1200 × 1200	37.7 kg	9	1.236 €	1.331 €
CO	7356	1400 × 900	33.5 kg	9	1.236 €	1.331 €
CO	7357	1400 × 1000	36.9 kg	9	1.236 €	1.331 €
CO	7362	1500 × 900	35.5 kg	9	1.236 €	1.331 €
CO	7363	1500 × 1000	39.2 kg	9	1.316 €	1.411 €
CO	7364	1600 × 900	37.8 kg	9	1.316 €	1.411 €
CO	7365	1600 × 1000	41.7 kg	9	1.367 €	1.462 €

Extras

PG	code	description	see	price
EX	AE	BetteAnti-Slip Pro*[1]	p. 272	190 €
EX	AS	BetteAnti-Slip Sense*[1,2]	p. 273	190 €
EX	PLUS	BetteGlaze® Plus	p. 274	160 €
EX	T2	Minimum support (pre-assembled at factory) for shower tiles	p. 278	79 €

*[1] Not available with Glaze® Plus.
*[2] Only available in combination with White (000).

Waste fittings

PG	article no.	description	see	White 000	coloured → p. 311	White and coloured with Anti-Slip Pro* | White 000 with Anti-Slip Sense*
IN	B525-	BetteAir 50, side outlet - 0,6 l/s	p. 306	267 €	267 €	267 €
IN	B524-	BetteAir 30, side outlet - 0,6 l/s	p. 306	267 €	267 €	267 €
IN	B599-	BetteAir Down, vertical outlet - 0,6 l/s	p. 306	276 €	276 €	276 €

* Please also state code AY or AX, refer to page 5 for order Information.

Accessories

PG	article no.	description	see	price
IN	B57-0401	Installation Box BetteAir	p. 340	272 €

Technical information and prices of additional BetteExtras on page 270. You will find the colours in the cover. Subject to alteration and production tolerance. Prices excluding VAT.

BetteFlat

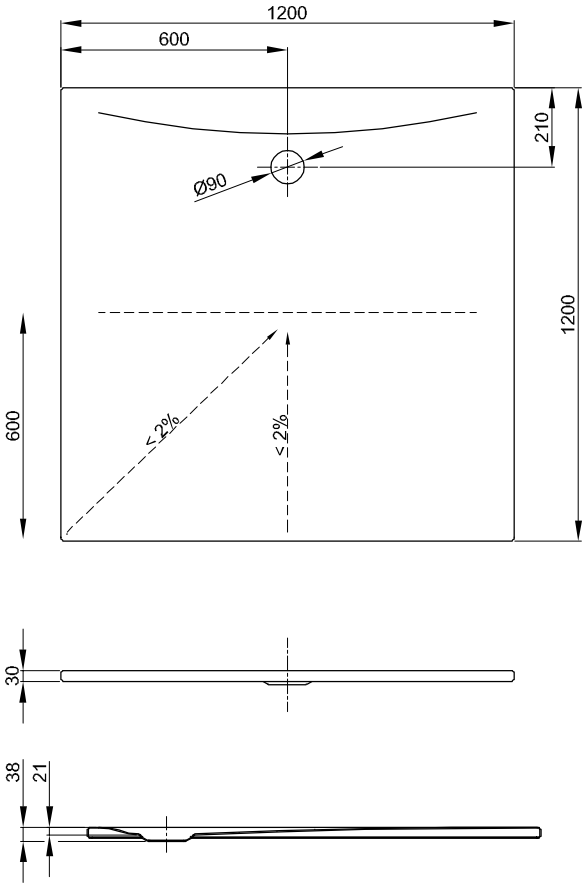

Information

We recommend the combination with the Installation System Universal or the Installation System Basic, Installation height: 67 - 205 mm. Alternatively use the Foot-System, Installation height: 80 - 200 mm.

Scope of delivery

Standard with Anti-slip Pro surface.

Including noise-reducing pads.

Installation height

Waste fittings	from
B598-	118 mm
B597-	98 mm
B574-	115 mm
B594-	50 mm

Dimensions

article no.	dimensions in mm
3372 AE	1200 × 1200

Subject to alteration and production tolerance.

Dimensions

PG	article no.	dimensions in mm	weight (net)	pcs/pallet	White 000 Matt colours → cover	Glossy colours → cover
CO	3372 AE	1200 × 1200	41 kg	15	1.307 €	1.402 €

Please note the ordering information on page 5.

Waste fittings

PG	article no.	description	see	Chrome 901	White and coloured → p. 310	White and coloured with Antislip Pro*
IN	B598-	BetteSolid 50, side outlet - 0,6 l/s	p. 302	167 €	224 €	224 €
IN	B597-	BetteSolid 30, side outlet - 0,6 l/s	p. 303	167 €	224 €	224 €
IN	B574-	BetteScope, side outlet - 0,85 l/s	p. 304	174 €	231 €	231 €
IN	B594-	BetteDown, vertical outlet - 0,6 l/s	p. 305	175 €	232 €	232 €

* Please also state code AY, refer to page 5 for order Information.

Accessories

PG	article no.	description	see	price
IN	B57-0370	Sealing System for rectangular shower trays	p. 356	110 €
IN	B57-0375	Sealing system onto wooden floor	p. 356	142 €
IN	B57-0407	Bath divider 3300 × 120 mm	p. 359	33 €
IN	Z0008669	Wall Brackets	p. 360	40 €

Foot-System for BetteFloor

→ p. 352

dimensions in mm	PG	article no.	price
1200 × 1200	IN	B50-3165	307 €

Technical information and prices of additional BetteExtras on page 270. You will find the colours in the cover. Subject to alteration and production tolerance. Prices excluding VAT.

BetteFloor 800 mm - 1000 mm

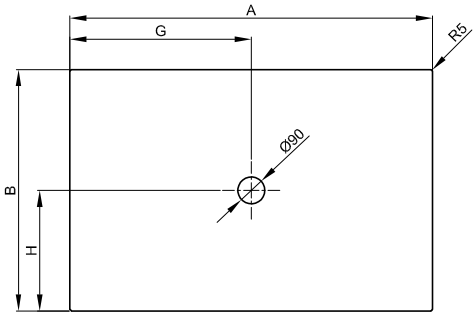

Illustration with pre-assembled Minimum support (T1).

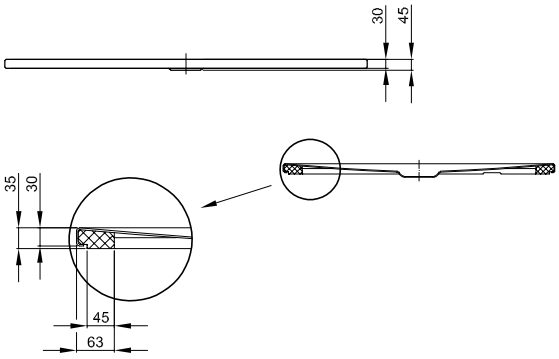

Illustration with pre-assembled Minimum support (T1).

Scope of delivery

Including noise-reducing pads.

Installation height

Waste fittings	from
B598-	118 mm
B597-	98 mm
B574-	115 mm
B594-	50 mm

Dimensions

article no.	dimensions in mm	A	B	G	H
5831	800 × 800	800	800	400	400
5711	900 × 700	900	700	450	350
5841	900 × 750	900	750	450	375
8751	900 × 800	900	800	450	400
5931	900 × 900	900	900	450	450
5881	1000 × 700	1000	700	500	350
1651	1000 × 750	1000	750	500	375
5491	1000 × 800	1000	800	500	400
1661	1000 × 900	1000	900	500	450
5941	1000 × 1000	1000	1000	500	500

Subject to alteration and production tolerance.

Dimensions

Further dimensions on the following pages.

PG	article no.	dimensions in mm	weight (net)	pcs/pallet	White 000 Matt colours → cover	Glossy colours → cover
CO	5831	800 × 800	20.4 kg	30	767 € ☗	862 €
CO	5711	900 × 700	20.2 kg	30	767 €	862 €
CO	5841	900 × 750	21.6 kg	30	767 € ☗	862 €
CO	8751	900 × 800	22.5 kg	30	767 € ☗	862 €
CO	5931	900 × 900	25 kg	30	767 € ☗	862 €
CO	5881	1000 × 700	22.3 kg	30	882 €	977 €
CO	1651	1000 × 750	23.2 kg	30	882 € ☗	977 €
CO	5491	1000 × 800	24.7 kg	30	882 € ☗	977 €
CO	1661	1000 × 900	27.5 kg	30	882 € ☗	977 €
CO	5941	1000 × 1000	30.8 kg	30	882 € ☗	977 €

Extras

PG	code	description	see	price
EX	AE	BetteAnti-Slip Pro*[1]	p. 272	190 €
EX	AS	BetteAnti-Slip Sense*[1,2]	p. 273	190 €
EX	PLUS	BetteGlaze® Plus	p. 274	160 €
EX	T1	Minimum tray support (pre-assembled at factory) for shower trays and shower areas	p. 277	79 €

*[1] Not available with Glaze® Plus.
*[2] Only available in combination with White (000).

Waste fittings

PG	article no.	description	see	Chrome 901	White and coloured → p. 310	White and coloured with Antislip Pro* | White 000 with Anti-Slip Sense*
IN	B598-	BetteSolid 50, side outlet - 0,6 l/s	p. 302	167 €	224 €	224 €
IN	B597-	BetteSolid 30, side outlet - 0,6 l/s	p. 303	167 €	224 €	224 €
IN	B574-	BetteScope, side outlet - 0,85 l/s	p. 304	174 €	231 €	231 €
IN	B594-	BetteDown, vertical outlet - 0,6 l/s	p. 305	175 €	232 €	232 €

* Please also state code AY or AX, refer to page 5 for order Information.

Accessories

PG	article no.	description	see	price
IN	B57-0375	Sealing system onto wooden floor	p. 356	142 €
IN	B57-0370	Sealing System for rectangular shower trays	p. 356	110 €
IN	B57-0371	Sealing System for Minimum Support	p. 356	110 €
IN	B57-0407	Bath divider 3300 × 120 mm	p. 359	33 €
IN	Z0008669	Wall Brackets	p. 360	40 €
IN	B57-0404	Minimum Support Flex for shower trays 25 mm & shower areas	p. 347	57 €

Foot-System for BetteFloor

→ p. 352

dimensions in mm	PG	article no.	price
800 × 800	IN	B50-3141	280 €
900 × 700	IN	B50-3124	280 €
900 × 750	IN	B50-3134	280 €
900 × 800	IN	B50-3143	280 €
900 × 900	IN	B50-3151	280 €
1000 × 700	IN	B50-3126	280 €
1000 × 750	IN	B50-3136	280 €
1000 × 800	IN	B50-3145	280 €
1000 × 900	IN	B50-3153	280 €
1000 × 1000	IN	B50-3164	280 €

Technical information and prices of additional BetteExtras on page 270. You will find the colours in the cover. Subject to alteration and production tolerance. Prices excluding VAT.

BetteFloor 1100 mm - 1200 mm

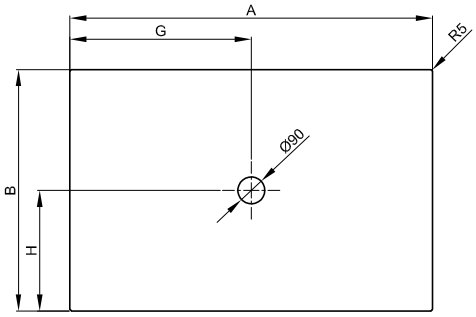

Illustration with pre-assembled Minimum support (T1).

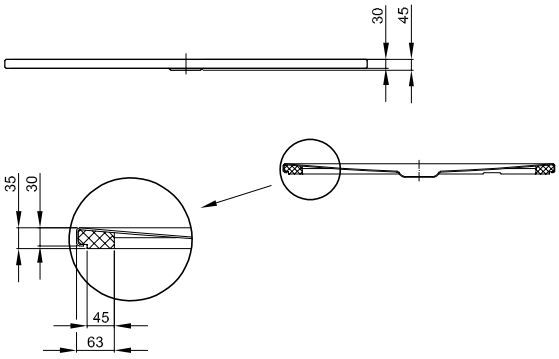

Illustration with pre-assembled Minimum support (T1).

Scope of delivery

Including noise-reducing pads.

Installation height

Waste fittings	from
B598-	118 mm
B597-	98 mm
B574-	115 mm
B594-	50 mm

Dimensions

article no.	dimensions in mm	A	B	G	H
8732	1100 × 750	1100	750	550	375
8731	1100 × 800	1100	800	550	400
8631	1100 × 900	1100	900	550	450
8735	1100 × 1000	1100	1000	550	500
1672	1200 × 700	1200	700	600	350
1671	1200 × 750	1200	750	600	375
1681	1200 × 800	1200	800	600	400
1261	1200 × 900	1200	900	600	450
8661	1200 × 1000	1200	1000	600	500
8721	1200 × 1200	1200	1200	600	600

Subject to alteration and production tolerance.

Dimensions

Further dimensions on the following pages.

PG	article no.	dimensions in mm	weight (net)	pcs/pallet	White 000 Matt colours → cover	Glossy colours → cover
CO	8732	1100 × 750	22.75 kg	30	920 €	1.015 €
CO	8731	1100 × 800	26.7 kg	30	920 € ☗	1.015 €
CO	8631	1100 × 900	29.8 kg	30	920 € ☗	1.015 €
CO	8735	1100 × 1000	29.5 kg	30	920 € ☗	1.015 €
CO	1672	1200 × 700	22.5 kg	30	1.037 €	1.132 €
CO	1671	1200 × 750	27.2 kg	30	1.037 €	1.132 €
CO	1681	1200 × 800	29.2 kg	30	1.037 € ☗	1.132 €
CO	1261	1200 × 900	31.9 kg	30	1.037 € ☗	1.132 €
CO	8661	1200 × 1000	35.5 kg	15	1.037 € ☗	1.132 €
CO	8721	1200 × 1200	41 kg	15	1.037 € ☗	1.132 €

Extras

PG	code	description	see	price
EX	AE	BetteAnti-Slip Pro*[1]	p. 272	190 €
EX	AS	BetteAnti-Slip Sense*[1,2]	p. 273	190 €
EX	PLUS	BetteGlaze® Plus	p. 274	160 €
EX	T1	Minimum tray support (pre-assembled at factory) for shower trays and shower areas	p. 277	79 €

*[1] Not available with Glaze® Plus.
*[2] Only available in combination with White (000).

Waste fittings

PG	article no.	description	see	Chrome 901	White and coloured → p. 310	White and coloured with Antislip Pro* | White 000 with Anti-Slip Sense*
IN	B598-	BetteSolid 50, side outlet - 0,6 l/s	p. 302	167 €	224 €	224 €
IN	B597-	BetteSolid 30, side outlet - 0,6 l/s	p. 303	167 €	224 €	224 €
IN	B574-	BetteScope, side outlet - 0,85 l/s	p. 304	174 €	231 €	231 €
IN	B594-	BetteDown, vertical outlet - 0,6 l/s	p. 305	175 €	232 €	232 €

* Please also state code AY or AX, refer to page 5 for order Information.

Accessories

PG	article no.	description	see	price
IN	B57-0375	Sealing system onto wooden floor	p. 356	142 €
IN	B57-0370	Sealing System for rectangular shower trays	p. 356	110 €
IN	B57-0371	Sealing System for Minimum Support	p. 356	110 €
IN	B57-0407	Bath divider 3300 × 120 mm	p. 359	33 €
IN	Z0008669	Wall Brackets	p. 360	40 €
IN	B57-0404	Minimum Support Flex for shower trays 25 mm & shower areas	p. 347	57 €

Foot-System for BetteFloor

→ p. 352

dimensions in mm	PG	article no.	price
1100 × 750	IN	B50-3127	280 €
1100 × 800	IN	B50-3147	280 €
1100 × 900	IN	B50-3155	280 €
1100 × 1000	IN	B50-3128	280 €
1200 × 700	IN	B50-3130	307 €
1200 × 750	IN	B50-3140	307 €
1200 × 800	IN	B50-3149	307 €
1200 × 900	IN	B50-3157	307 €
1200 × 1000	IN	B50-3174	307 €
1200 × 1200	IN	B50-3165	307 €

Technical information and prices of additional BetteExtras on page 270. You will find the colours in the cover. Subject to alteration and production tolerance. Prices excluding VAT.

BetteFloor 1300 mm - 1500 mm

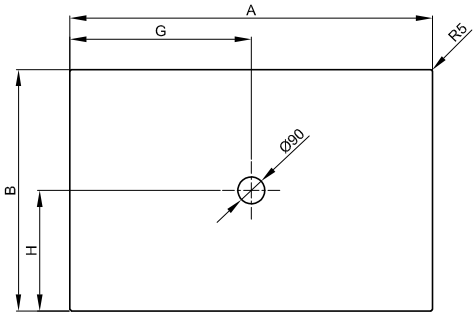

Illustration with pre-assembled Minimum support (T1).

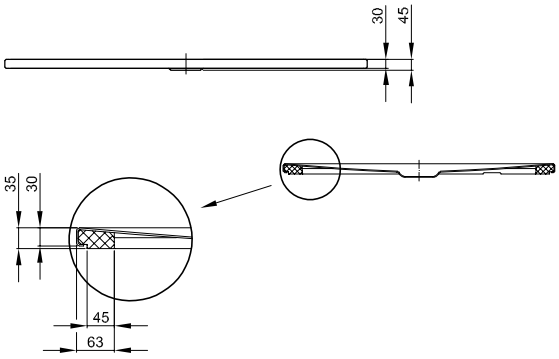

Illustration with pre-assembled Minimum support (T1).

Scope of delivery

Including noise-reducing pads.

Installation height

Waste fittings	from
B598-	118 mm
B597-	98 mm
B574-	115 mm
B594-	50 mm

Dimensions

article no.	dimensions in mm	A	B	G	H
5797	1300 × 750	1300	750	650	375
5793	1300 × 800	1300	800	650	400
5791	1300 × 900	1300	900	650	450
5794	1300 × 1000	1300	1000	650	500
5803	1400 × 700	1400	700	700	350
5802	1400 × 750	1400	750	700	375
5801	1400 × 800	1400	800	700	400
5836	1400 × 900	1400	900	700	450
5851	1400 × 1000	1400	1000	700	500
5938	1500 × 700	1500	700	750	350
5939	1500 × 750	1500	750	750	375
5937	1500 × 800	1500	800	750	400
5936	1500 × 900	1500	900	750	450
5946	1500 × 1000	1500	1000	750	500

Subject to alteration and production tolerance.

Dimensions

Further dimensions on the following pages.

PG	article no.	dimensions in mm	weight (net)	pcs/pallet	White 000 Matt colours → cover	Glossy colours → cover
CO	5797	1300 × 750	28.5 kg	15	1.037 €	1.132 €
CO	5793	1300 × 800	30.9 kg	15	1.037 €	1.132 €
CO	5791	1300 × 900	34.2 kg	15	1.037 € ☗	1.132 €
CO	5794	1300 × 1000	38.4 kg	15	1.037 € ☗	1.132 €
CO	5803	1400 × 700	27 kg	15	1.037 €	1.132 €
CO	5802	1400 × 750	31.2 kg	15	1.037 €	1.132 €
CO	5801	1400 × 800	33 kg	15	1.037 € ☗	1.132 €
CO	5836	1400 × 900	36.4 kg	15	1.077 € ☗	1.172 €
CO	5851	1400 × 1000	39.9 kg	15	1.077 € ☗	1.172 €
CO	5938	1500 × 700	28.5 kg	15	1.077 €	1.172 €
CO	5939	1500 × 750	30 kg	15	1.077 €	1.172 €
CO	5937	1500 × 800	35 kg	15	1.077 € ☗	1.172 €
CO	5936	1500 × 900	39.5 kg	15	1.077 € ☗	1.172 €
CO	5946	1500 × 1000	39.5 kg	15	1.077 € ☗	1.172 €

Extras

PG	code	description	see	price
EX	AE	BetteAnti-Slip Pro*[1]	p. 272	190 €
EX	AS	BetteAnti-Slip Sense*[1,2]	p. 273	190 €
EX	PLUS	BetteGlaze® Plus	p. 274	160 €
EX	T1	Minimum tray support (pre-assembled at factory) for shower trays and shower areas	p. 277	79 €

*[1] Not available with Glaze® Plus.
*[2] Only available in combination with White (000).

Waste fittings

PG	article no.	description	see	Chrome 901	White and coloured → p. 310	White and coloured with Antislip Pro* | White 000 with Anti-Slip Sense*
IN	B598-	BetteSolid 50, side outlet - 0,6 l/s	p. 302	167 €	224 €	224 €
IN	B597-	BetteSolid 30, side outlet - 0,6 l/s	p. 303	167 €	224 €	224 €
IN	B574-	BetteScope, side outlet - 0,85 l/s	p. 304	174 €	231 €	231 €
IN	B594-	BetteDown, vertical outlet - 0,6 l/s	p. 305	175 €	232 €	232 €

* Please also state code AY or AX, refer to page 5 for order Information.

Accessories

PG	article no.	description	see	price
IN	B57-0375	Sealing system onto wooden floor	p. 356	142 €
IN	B57-0370	Sealing System for rectangular shower trays	p. 356	110 €
IN	B57-0371	Sealing System for Minimum Support	p. 356	110 €
IN	B57-0407	Bath divider 3300 × 120 mm	p. 359	33 €
IN	Z0008669	Wall Brackets	p. 360	40 €
IN	B57-0404	Minimum Support Flex for shower trays 25 mm & shower areas	p. 347	57 €

Foot-System for BetteFloor

→ p. 352

dimensions in mm	PG	article no.	price
1300 × 750	IN	B50-3154	307 €
1300 × 800	IN	B50-3160	307 €
1300 × 900	IN	B50-3138	307 €
1300 × 1000	IN	B50-3161	307 €
1400 × 700	IN	B50-3158	335 €
1400 × 750	IN	B50-3159	335 €
1400 × 800	IN	B50-3150	335 €
1400 × 900	IN	B50-3162	335 €
1400 × 1000	IN	B50-3139	335 €
1500 × 700	IN	B50-3175	335 €
1500 × 750	IN	B50-3176	335 €
1500 × 800	IN	B50-3179	335 €
1500 × 900	IN	B50-3177	335 €
1500 × 1000	IN	B50-3178	335 €

Technical information and prices of additional BetteExtras on page 270. You will find the colours in the cover. Subject to alteration and production tolerance. Prices excluding VAT.

BetteFloor 1600 mm - 1800 mm

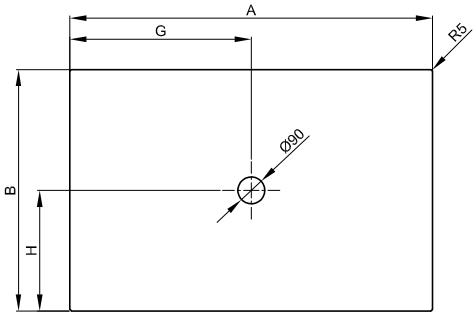

Illustration with pre-assembled Minimum support (T1).

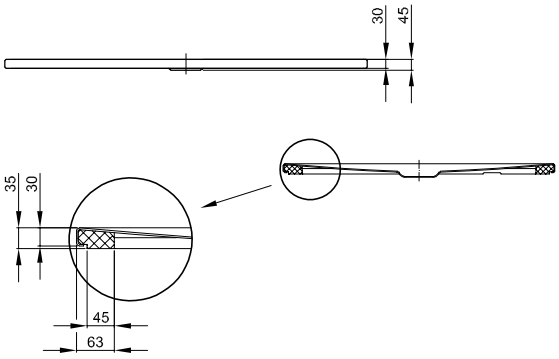

Illustration with pre-assembled Minimum support (T1).

Scope of delivery

Including noise-reducing pads.

Installation height

Waste fittings	from
B598-	118 mm
B597-	98 mm
B574-	115 mm
B594-	50 mm

Dimensions

article no.	dimensions in mm	A	B	G	H
5948	1600 × 700	1600	700	800	350
5949	1600 × 750	1600	750	800	375
5957	1600 × 800	1600	800	800	400
5966	1600 × 900	1600	900	800	450
5969	1600 × 1000	1600	1000	800	500
5994	1700 × 750	1700	750	850	375
5989	1700 × 800	1700	800	850	400
5991	1700 × 900	1700	900	850	450
5817	1700 × 1000	1700	1000	850	500
5981	1800 × 800	1800	800	900	400
5988	1800 × 900	1800	900	900	450
5818	1800 × 1000	1800	1000	900	500

Subject to alteration and production tolerance.

Dimensions

PG	article no.	dimensions in mm	weight (net)	pcs/pallet	White 000 Matt colours → cover	Glossy colours → cover
CO	5948	1600 × 700	30 kg	15	1.077 €	1.172 €
CO	5949	1600 × 750	35 kg	15	1.077 €	1.172 €
CO	5957	1600 × 800	37.8 kg	15	1.077 € ☗	1.172 €
CO	5966	1600 × 900	41.9 kg	15	1.077 € ☗	1.172 €
CO	5969	1600 × 1000	45.6 kg	15	1.118 € ☗	1.213 €
CO	5994	1700 × 750	34.5 kg	15	1.077 €	1.172 €
CO	5989	1700 × 800	39.3 kg	15	1.117 € ☗	1.212 €
CO	5991	1700 × 900	43.4 kg	15	1.117 € ☗	1.212 €
CO	5817	1700 × 1000	46.5 kg	15	1.160 €	1.255 €
CO	5981	1800 × 800	38.8 kg	15	1.160 € ☗	1.255 €
CO	5988	1800 × 900	45.4 kg	15	1.160 € ☗	1.255 €
CO	5818	1800 × 1000	49.9 kg	15	1.201 € ☗	1.296 €

Extras

PG	code	description	see	price
EX	AE	BetteAnti-Slip Pro*[1]	p. 272	190 €
EX	AS	BetteAnti-Slip Sense*[1,2]	p. 273	190 €
EX	PLUS	BetteGlaze® Plus	p. 274	160 €
EX	T1	Minimum tray support (pre-assembled at factory) for shower trays and shower areas	p. 277	79 €

*[1] Not available with Glaze® Plus.
*[2] Only available in combination with White (000).

Waste fittings

PG	article no.	description	see	Chrome 901	White and coloured → p. 310	White and coloured with Antislip Pro* | White 000 with Anti-Slip Sense*
IN	B598-	BetteSolid 50, side outlet - 0,6 l/s	p. 302	167 €	224 €	224 €
IN	B597-	BetteSolid 30, side outlet - 0,6 l/s	p. 303	167 €	224 €	224 €
IN	B574-	BetteScope, side outlet - 0,85 l/s	p. 304	174 €	231 €	231 €
IN	B594-	BetteDown, vertical outlet - 0,6 l/s	p. 305	175 €	232 €	232 €

* Please also state code AY or AX, refer to page 5 for order Information.

Accessories

PG	article no.	description	see	price
IN	B57-0375	Sealing system onto wooden floor	p. 356	142 €
IN	B57-0370	Sealing System for rectangular shower trays	p. 356	110 €
IN	B57-0371	Sealing System for Minimum Support	p. 356	110 €
IN	B57-0407	Bath divider 3300 × 120 mm	p. 359	33 €
IN	Z0008669	Wall Brackets	p. 360	40 €
IN	B57-0404	Minimum Support Flex for shower trays 25 mm & shower areas	p. 347	57 €

Foot-System for BetteFloor

→ p. 352

dimensions in mm	PG	article no.	price
1600 × 700	IN	B50-3142	335 €
1600 × 750	IN	B50-3144	335 €
1600 × 800	IN	B50-3166	335 €
1600 × 900	IN	B50-3146	335 €
1600 × 1000	IN	B50-3168	335 €
1700 × 750	IN	B50-3182	335 €
1700 × 800	IN	B50-3163	335 €
1700 × 900	IN	B50-3148	335 €
1700 × 1000	IN	B50-3189	335 €
1800 × 800	IN	B50-3169	335 €
1800 × 900	IN	B50-3152	335 €
1800 × 1000	IN	B50-3191	335 €

Technical information and prices of additional BetteExtras on page 270. You will find the colours in the cover. Subject to alteration and production tolerance. Prices excluding VAT.

BetteFloor Caro

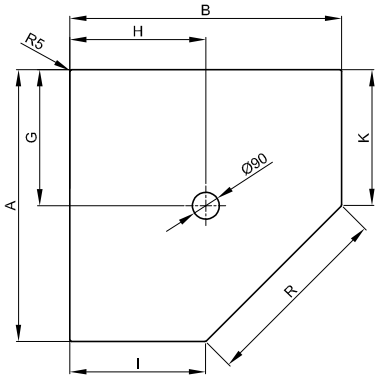

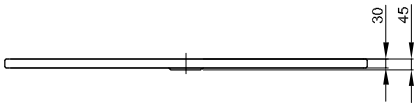

Information

We recommend to combine the shower area with the Foot-System, Installation height: 80 - 200 mm.

Scope of delivery

Including noise-reducing pads.

Installation height

Waste fittings	from
B598-	118 mm
B597-	98 mm
B574-	115 mm
B594-	50 mm

Dimensions

article no.	dimensions in mm	A	B	G	H	I	K	R
7191	900 × 900	900	900	450	450	450	450	636
7211	1000 × 1000	1000	1000	500	500	500	500	707

Subject to alteration and production tolerance.

Dimensions

PG	article no.	dimensions in mm	weight (net)	pcs/pallet	White 000 Matt colours → cover	Glossy colours → cover
CO	7191	900 × 900	22.9 kg	30	1.325 €	1.420 €
CO	7211	1000 × 1000	26.5 kg	30	1.524 €	1.619 €

Extras

PG	code	description	see	price
EX	AE	BetteAnti-Slip Pro*[1]	p. 272	190 €
EX	AS	BetteAnti-Slip Sense*[1,2]	p. 273	190 €
EX	PLUS	BetteGlaze® Plus	p. 274	160 €

*[1] Not available with Glaze® Plus.
*[2] Only available in combination with White (000).

Waste fittings

PG	article no.	description	see	Chrome 901	White and coloured → p. 310	White and coloured with Antislip Pro* | White 000 with Anti-Slip Sense*
IN	B598-	BetteSolid 50, side outlet - 0,6 l/s	p. 302	167 €	224 €	224 €
IN	B597-	BetteSolid 30, side outlet - 0,6 l/s	p. 303	167 €	224 €	224 €
IN	B574-	BetteScope, side outlet - 0,85 l/s	p. 304	174 €	231 €	231 €
IN	B594-	BetteDown, vertical outlet - 0,6 l/s	p. 305	175 €	232 €	232 €

* Please also state code AY or AX, refer to page 5 for order Information.

Accessories

PG	article no.	description	see	price
IN	B57-0374	Sealing System for caro shower trays	p. 356	121 €
IN	B57-0407	Bath divider 3300 × 120 mm	p. 359	33 €
IN	Z0008669	Wall Brackets	p. 360	40 €

Foot-System for BetteFloor Caro

→ p. 353

dimensions in mm	PG	article no.	price
900 × 900	IN	B51-3151	324 €
1000 × 1000	IN	B51-3164	324 €

Technical information and prices of additional BetteExtras on page 270. You will find the colours in the cover. Subject to alteration and production tolerance. Prices excluding VAT.

BetteFloor Corner

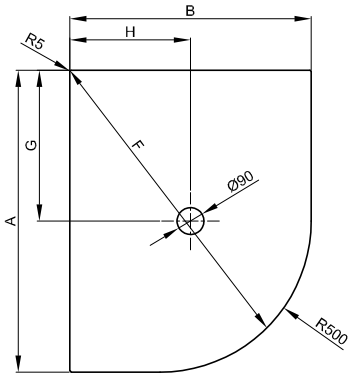

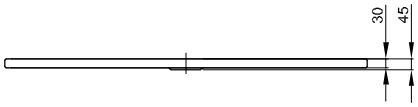

Information

We recommend to combine the shower area with the Foot-System, Installation height: 80 - 200 mm.

Scope of delivery

Including noise-reducing pads.

Installation height

Waste fittings	from
B598-	118 mm
B597-	98 mm
B574-	115 mm
B594-	50 mm

Dimensions

article no.	dimensions in mm	A	B	F	G	H
5421	900 × 900	900	900	1066	450	450
5451	1000 × 1000	1000	1000	1207	500	500

Subject to alteration and production tolerance.

Dimensions

PG	article no.	dimensions in mm	weight (net)	pcs/pallet	White 000 Matt colours → cover	Glossy colours → cover
CO	5421	900 × 900	23.4 kg	30	1.035 €	1.130 €
CO	5451	1000 × 1000	28.1 kg	30	1.191 €	1.286 €

Extras

PG	code	description	see	price
EX	AE	BetteAnti-Slip Pro*[1]	p. 272	190 €
EX	AS	BetteAnti-Slip Sense*[1,2]	p. 273	190 €
EX	PLUS	BetteGlaze® Plus	p. 274	160 €

*[1] Not available with Glaze® Plus.
*[2] Only available in combination with White (000).

Waste fittings

PG	article no.	description	see	Chrome 901	White and coloured → p. 310	White and coloured with Antislip Pro* | White 000 with Anti-Slip Sense*
IN	B598-	BetteSolid 50, side outlet - 0,6 l/s	p. 302	167 €	224 €	224 €
IN	B597-	BetteSolid 30, side outlet - 0,6 l/s	p. 303	167 €	224 €	224 €
IN	B574-	BetteScope, side outlet - 0,85 l/s	p. 304	174 €	231 €	231 €
IN	B594-	BetteDown, vertical outlet - 0,6 l/s	p. 305	175 €	232 €	232 €

* Please also state code AY or AX, refer to page 5 for order Information.

Accessories

PG	article no.	description	see	price
IN	B57-0373	Sealing System for corner shower trays	p. 356	121 €
IN	B57-0407	Bath divider 3300 × 120 mm	p. 359	33 €
IN	Z0008669	Wall Brackets	p. 360	40 €

Foot-System for BetteFloor Corner

→ p. 354

dimensions in mm	PG	article no.	price
900 × 900	IN	B52-3151	259 €
1000 × 1000	IN	B52-3164	259 €

Technical information and prices of additional BetteExtras on page 270. You will find the colours in the cover. Subject to alteration and production tolerance. Prices excluding VAT.

BetteFloor Side 900 mm - 1200 mm

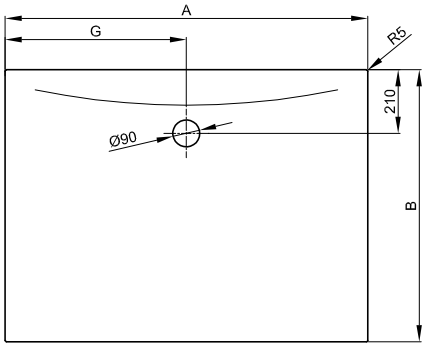

Illustration with pre-assembled Minimum support (T1).

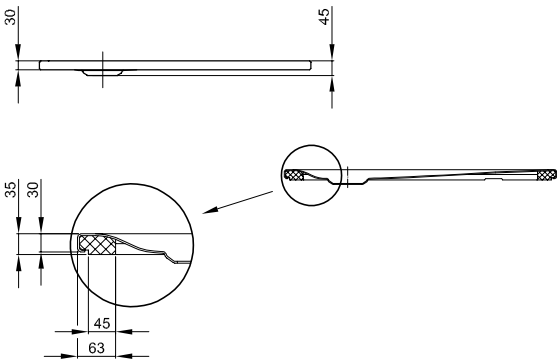

Illustration with pre-assembled Minimum support (T1).

Scope of delivery

Including noise-reducing pads.

Design: Tesseraux + Partner

Installation height

Waste fittings	from
B598-	118 mm
B597-	98 mm
B574-	115 mm
B594-	50 mm

Dimensions

article no.	dimensions in mm	A	B	G
3381	900 × 900	900	900	450
3388	1000 × 800	1000	800	500
3385	1000 × 900	1000	900	500
3382	1000 × 1000	1000	1000	500
3374	1100 × 800	1100	800	550
3396	1100 × 900	1100	900	550
3387	1200 × 800	1200	800	600
3380	1200 × 900	1200	900	600
3383	1200 × 1000	1200	1000	600
3391	1200 × 1200	1200	1200	600

Subject to alteration and production tolerance.

Dimensions

Further dimensions on the following pages.

PG	article no.	dimensions in mm	weight (net)	pcs/pallet	White 000 Matt colours → cover	Glossy colours → cover
CO	3381	900 × 900	25 kg	30	798 € ☗	893 €
CO	3388	1000 × 800	24.7 kg	30	917 € ☗	1.012 €
CO	3385	1000 × 900	27.5 kg	30	917 € ☗	1.012 €
CO	3382	1000 × 1000	30.8 kg	30	917 € ☗	1.012 €
CO	3374	1100 × 800	26.7 kg	30	957 €	1.052 €
CO	3396	1100 × 900	26.6 kg	30	957 €	1.052 €
CO	3387	1200 × 800	29.2 kg	30	1.037 € ☗	1.132 €
CO	3380	1200 × 900	31.9 kg	30	1.037 € ☗	1.132 €
CO	3383	1200 × 1000	35.5 kg	15	1.037 € ☗	1.132 €
CO	3391	1200 × 1200	41 kg	15	1.117 € ☗	1.212 €

Extras

PG	code	description	see	price
EX	AE	BetteAnti-Slip Pro*[1]	p. 272	190 €
EX	AS	BetteAnti-Slip Sense*[1,2]	p. 273	190 €
EX	PLUS	BetteGlaze® Plus	p. 274	160 €
EX	T1	Minimum tray support (pre-assembled at factory) for shower trays and shower areas	p. 277	79 €
EX		BetteUpstand	p. 280	from 424 €

*[1] Not available with Glaze® Plus.
*[2] Only available in combination with White (000).

Waste fittings

PG	article no.	description	see	Chrome 901	White and coloured → p. 310	White and coloured with Antislip Pro* | White 000 with Anti-Slip Sense*
IN	B598-	BetteSolid 50, side outlet - 0,6 l/s	p. 302	167 €	224 €	224 €
IN	B597-	BetteSolid 30, side outlet - 0,6 l/s	p. 303	167 €	224 €	224 €
IN	B574-	BetteScope, side outlet - 0,85 l/s	p. 304	174 €	231 €	231 €
IN	B594-	BetteDown, vertical outlet - 0,6 l/s	p. 305	175 €	232 €	232 €

* Please also state code AY or AX, refer to page 5 for order Information.

Accessories

PG	article no.	description	see	price
IN	B57-0370	Sealing System for rectangular shower trays	p. 356	110 €
IN	B57-0375	Sealing system onto wooden floor	p. 356	142 €
IN	B57-0371	Sealing System for Minimum Support	p. 356	110 €
IN	B57-0407	Bath divider 3300 × 120 mm	p. 359	33 €
IN	Z0008669	Wall Brackets	p. 360	40 €
IN	B57-0404	Minimum Support Flex for shower trays 25 mm & shower areas	p. 347	57 €

Foot-System for BetteFloor

→ p. 352

dimensions in mm	PG	article no.	price
900 × 900	IN	B50-3151	280 €
1000 × 800	IN	B50-3145	280 €
1000 × 900	IN	B50-3153	280 €
1000 × 1000	IN	B50-3164	280 €
1100 × 800	IN	B50-3147	280 €
1100 × 900	IN	B50-3155	280 €
1200 × 800	IN	B50-3149	307 €
1200 × 900	IN	B50-3157	307 €
1200 × 1000	IN	B50-3174	307 €
1200 × 1200	IN	B50-3165	307 €

Technical information and prices of additional BetteExtras on page 270. You will find the colours in the cover. Subject to alteration and production tolerance. Prices excluding VAT.

BetteFloor Side 1300 mm - 1500 mm

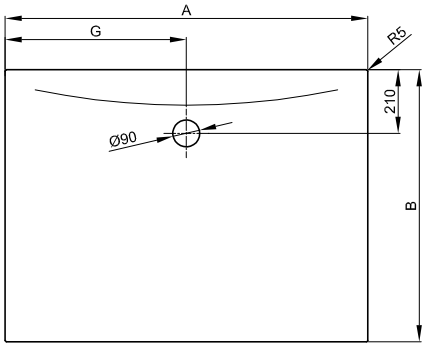

Illustration with pre-assembled Minimum support (T1).

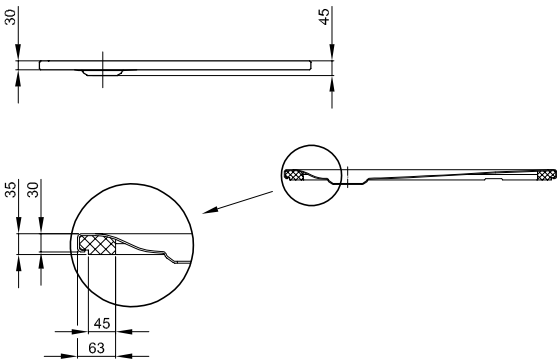

Illustration with pre-assembled Minimum support (T1).

Information

The dimensions 1400 × 1200 mm and 1500 × 1200 mm are not available with BetteUpstand.

Scope of delivery

Including noise-reducing pads.

Design: Tesseraux + Partner

Installation height

Waste fittings	from
B598-	118 mm
B597-	98 mm
B574-	115 mm
B594-	50 mm

Dimensions

article no.	dimensions in mm	A	B	G
3398	1300 × 900	1300	900	650
3399	1300 × 1000	1300	1000	650
3379	1400 × 800	1400	800	700
3384	1400 × 900	1400	900	700
3386	1400 × 1000	1400	1000	700
3394	1400 × 1200	1400	1200	700
3393	1500 × 900	1500	900	750
3389	1500 × 1000	1500	1000	750
3395	1500 × 1200	1500	1200	750

Subject to alteration and production tolerance.

Dimensions

Further dimensions on the following pages.

PG	article no.	dimensions in mm	weight (net)	pcs/pallet	White 000 Matt colours → cover	Glossy colours → cover
CO	3398	1300 × 900	34.2 kg	15	1.117 €	1.212 €
CO	3399	1300 × 1000	36 kg	15	1.117 €	1.212 €
CO	3379	1400 × 800	33 kg	15	1.117 €	1.212 €
CO	3384	1400 × 900	36.4 kg	15	1.117 € ☗	1.212 €
CO	3386	1400 × 1000	39.9 kg	15	1.117 € ☗	1.212 €
CO	3394	1400 × 1200	42.15 kg	15	1.316 € ☗	1.411 €
CO	3393	1500 × 900	39.5 kg	15	1.196 €	1.291 €
CO	3389	1500 × 1000	39.5 kg	15	1.196 € ☗	1.291 €
CO	3395	1500 × 1200	45.05 kg	15	1.316 €	1.411 €

Extras

PG	code	description	see	price
EX	AE	BetteAnti-Slip Pro*[1]	p. 272	190 €
EX	AS	BetteAnti-Slip Sense*[1,2]	p. 273	190 €
EX	PLUS	BetteGlaze® Plus	p. 274	160 €
EX	T1	Minimum tray support (pre-assembled at factory) for shower trays and shower areas	p. 277	79 €
EX		BetteUpstand	p. 280	from 424 €

*[1] Not available with Glaze® Plus.
*[2] Only available in combination with White (000).

Waste fittings

PG	article no.	description	see	Chrome 901	White and coloured → p. 310	White and coloured with Antislip Pro* | White 000 with Anti-Slip Sense*
IN	B598-	BetteSolid 50, side outlet - 0,6 l/s	p. 302	167 €	224 €	224 €
IN	B597-	BetteSolid 30, side outlet - 0,6 l/s	p. 303	167 €	224 €	224 €
IN	B574-	BetteScope, side outlet - 0,85 l/s	p. 304	174 €	231 €	231 €
IN	B594-	BetteDown, vertical outlet - 0,6 l/s	p. 305	175 €	232 €	232 €

* Please also state code AY or AX, refer to page 5 for order Information.

Accessories

PG	article no.	description	see	price
IN	B57-0370	Sealing System for rectangular shower trays	p. 356	110 €
IN	B57-0375	Sealing system onto wooden floor	p. 356	142 €
IN	B57-0371	Sealing System for Minimum Support	p. 356	110 €
IN	B57-0407	Bath divider 3300 × 120 mm	p. 359	33 €
IN	Z0008669	Wall Brackets	p. 360	40 €
IN	B57-0404	Minimum Support Flex for shower trays 25 mm & shower areas	p. 347	57 €

Foot-System for BetteFloor

→ p. 352

dimensions in mm	PG	article no.	price
1300 × 900	IN	B50-3138	307 €
1300 × 1000	IN	B50-3161	307 €
1400 × 800	IN	B50-3150	335 €
1400 × 900	IN	B50-3162	335 €
1400 × 1000	IN	B50-3139	335 €
1400 × 1200	IN	B50-3184	335 €
1500 × 900	IN	B50-3177	335 €
1500 × 1000	IN	B50-3178	335 €
1500 × 1200	IN	B50-3185	335 €

Technical information and prices of additional BetteExtras on page 270. You will find the colours in the cover. Subject to alteration and production tolerance. Prices excluding VAT.

BetteFloor Side 1600 mm - 1800 mm

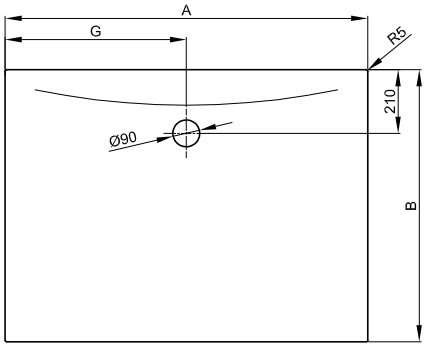

Illustration with pre-assembled Minimum support (T1).

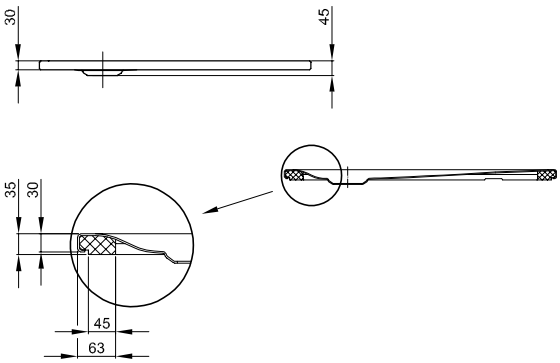

Illustration with pre-assembled Minimum support (T1).

Information

The dimensions 1600 × 1200 mm, 1800 × 900 mm and 1800 × 1000 mm are not available with BetteUpstand.

Scope of delivery

Including noise-reducing pads.

Design: Tesseraux + Partner

Installation height

Waste fittings	from
B598-	118 mm
B597-	98 mm
B574-	115 mm
B594-	50 mm

Dimensions

article no.	dimensions in mm	A	B	G
3375	1600 × 800	1600	800	800
3390	1600 × 900	1600	900	800
3397	1600 × 1000	1600	1000	800
3392	1600 × 1200	1600	1200	800
3376	1700 × 900	1700	900	850
3377	1800 × 900	1800	900	900
3378	1800 × 1000	1800	1000	900

Subject to alteration and production tolerance.

Dimensions

PG	article no.	dimensions in mm	weight (net)	pcs/pallet	White 000 Matt colours → cover	Glossy colours → cover
CO	3375	1600 × 800	37.8 kg	15	1.196 €	1.291 €
CO	3390	1600 × 900	41.9 kg	15	1.196 € ☗	1.291 €
CO	3397	1600 × 1000	41.8 kg	15	1.242 € ☗	1.337 €
CO	3392	1600 × 1200	51.8 kg	15	1.367 €	1.462 €
CO	3376	1700 × 900	43.4 kg	15	1.196 €	1.291 €
CO	3377	1800 × 900	45.4 kg	15	1.242 €	1.337 €
CO	3378	1800 × 1000	49.9 kg	15	1.242 €	1.337 €

Extras

PG	code	description	see	price
EX	AE	BetteAnti-Slip Pro*[1]	p. 272	190 €
EX	AS	BetteAnti-Slip Sense*[1,2]	p. 273	190 €
EX	PLUS	BetteGlaze® Plus	p. 274	160 €
EX	T1	Minimum tray support (pre-assembled at factory) for shower trays and shower areas	p. 277	79 €
EX		BetteUpstand	p. 280	from 424 €

*[1] Not available with Glaze® Plus.
*[2] Only available in combination with White (000).

Waste fittings

PG	article no.	description	see	Chrome 901	White and coloured → p. 310	White and coloured with Antislip Pro* | White 000 with Anti-Slip Sense*
IN	B598-	BetteSolid 50, side outlet - 0,6 l/s	p. 302	167 €	224 €	224 €
IN	B597-	BetteSolid 30, side outlet - 0,6 l/s	p. 303	167 €	224 €	224 €
IN	B574-	BetteScope, side outlet - 0,85 l/s	p. 304	174 €	231 €	231 €
IN	B594-	BetteDown, vertical outlet - 0,6 l/s	p. 305	175 €	232 €	232 €

* Please also state code AY or AX, refer to page 5 for order Information.

Accessories

PG	article no.	description	see	price
IN	B57-0370	Sealing System for rectangular shower trays	p. 356	110 €
IN	B57-0375	Sealing system onto wooden floor	p. 356	142 €
IN	B57-0371	Sealing System for Minimum Support	p. 356	110 €
IN	B57-0407	Bath divider 3300 × 120 mm	p. 359	33 €
IN	Z0008669	Wall Brackets	p. 360	40 €
IN	B57-0404	Minimum Support Flex for shower trays 25 mm & shower areas	p. 347	57 €

Foot-System for BetteFloor

→ p. 352

dimensions in mm	PG	article no.	price
1600 × 800	IN	B50-3166	335 €
1600 × 900	IN	B50-3146	335 €
1600 × 1000	IN	B50-3168	335 €
1600 × 1200	IN	B50-3183	335 €
1700 × 900	IN	B50-3148	335 €
1800 × 900	IN	B50-3152	335 €
1800 × 1000	IN	B50-3191	335 €

Technical information and prices of additional BetteExtras on page 270. You will find the colours in the cover. Subject to alteration and production tolerance. Prices excluding VAT.

BetteCaro 35 mm, same shank length

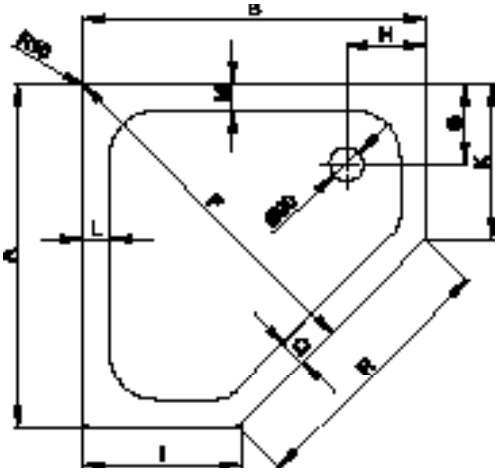

Scope of delivery

Including noise-reducing pads.

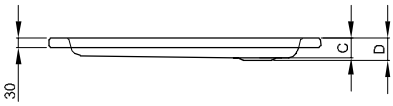

Installation height

Waste fittings	from
B598-	118 mm
B597-	98 mm
B574-	110 mm
B594-	55 mm

Dimensions

article no.	dimensions in mm	A	B	C	D	F	G	H	I	K	L	M	Q	R
5319	800 × 800 × 35	800	800	35	50	813	210	210	350	350	65	65	60	636
7189	900 × 900 × 35	900	900	35	50	955	210	210	450	450	65	65	60	636
7219	1000 × 1000 × 35	1000	1000	35	50	1061	210	210	500	500	70	70	60	707

Subject to alteration and production tolerance.

Dimensions

PG	article no.	dimensions in mm	weight (net)	pcs/pallet	White 000 → cover	coloured → cover
CO	5319	800 × 800 × 35	14.1 kg	40	1.129 € ☗	1.224 €
CO	7189	900 × 900 × 35	16.6 kg	40	1.129 € ☗	1.224 €
CO	7219	1000 × 1000 × 35	21.4 kg	40	1.298 € ☗	1.393 €

Extras

PG	code	description	see	price
EX	AE	BetteAnti-Slip Pro*[1]	p. 272	190 €
EX	AS	BetteAnti-Slip Sense*[1,2]	p. 273	190 €
EX	PLUS	BetteGlaze® Plus	p. 274	160 €
EX		BetteUpstand	p. 280	from 424 €
EX		Profi Corner	p. 284	from 404 €

*[1] Not available with Glaze® Plus.
*[2] Only available in combination with White (000).

Waste fittings

PG	article no.	description	see	Chrome 901	White and coloured → p. 310	White and coloured with Antislip Pro* | White 000 with Anti-Slip Sense*
IN	B598-	BetteSolid 50, side outlet - 0,6 l/s	p. 302	167 €	224 €	224 €
IN	B597-	BetteSolid 30, side outlet - 0,6 l/s	p. 303	167 €	224 €	224 €
IN	B574-	BetteScope, side outlet - 0,85 l/s	p. 304	174 €	231 €	231 €
IN	B594-	BetteDown, vertical outlet - 0,6 l/s	p. 305	175 €	232 €	232 €

* Please also state code AY or AX, refer to page 5 for order Information.

Accessories

PG	article no.	description	see	price
IN	B57-0374	Sealing System for caro shower trays	p. 356	121 €
IN	B57-0407	Bath divider 3300 × 120 mm	p. 359	33 €

Foot-System BetteCaro

→ p. 350

dimensions in mm	PG	article no.	price
800 × 800	IN	B51-3041	210 €
900 × 900	IN	B51-3051	210 €
1000 × 1000	IN	B51-3064	210 €

Technical information and prices of additional BetteExtras on page 270. You will find the colours in the cover. Subject to alteration and production tolerance. Prices excluding VAT.

BetteCorner 35 mm, same shank length

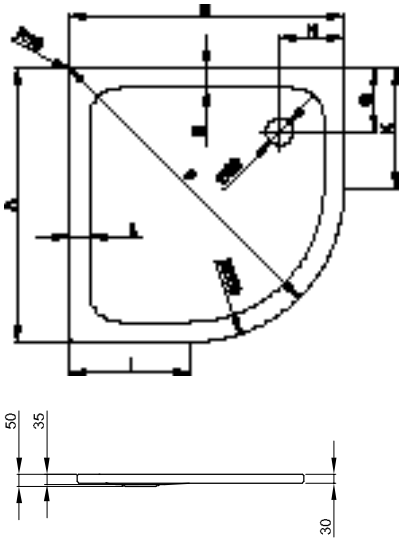

Scope of delivery

Including noise-reducing pads.

Installation height

Waste fittings	from
B598-	118 mm
B597-	98 mm
B574-	110 mm
B594-	55 mm

Dimensions

article no.	dimensions in mm	A	B	F	G	H	I	K	L	M
5399	800 × 800 × 35	800	800	924	210	210	300	300	65	65
5429	900 × 900 × 35	900	900	1066	210	210	400	400	65	65
5459	1000 × 1000 × 35	1000	1000	1207	210	210	500	500	65	65

Subject to alteration and production tolerance.

Dimensions

PG	article no.	dimensions in mm	weight (net)	pcs/pallet	White 000 → cover	coloured → cover
CO	5399	800 × 800 × 35	13.8 kg	40	882 € ☗	977 €
CO	5429	900 × 900 × 35	17.9 kg	40	882 € ☗	977 €
CO	5459	1000 × 1000 × 35	21.8 kg	40	1.014 € ☗	1.109 €

Extras

PG	code	description	see	price
EX	AE	BetteAnti-Slip Pro*[1]	p. 272	190 €
EX	AS	BetteAnti-Slip Sense*[1,2]	p. 273	190 €
EX	PLUS	BetteGlaze® Plus	p. 274	160 €
EX		BetteUpstand	p. 280	from 424 €
EX		Profi Corner	p. 284	from 404 €

*[1] Not available with Glaze® Plus.
*[2] Only available in combination with White (000).

Waste fittings

PG	article no.	description	see	Chrome 901	White and coloured → p. 310	White and coloured with Antislip Pro* | White 000 with Anti-Slip Sense*
IN	B598-	BetteSolid 50, side outlet - 0,6 l/s	p. 302	167 €	224 €	224 €
IN	B597-	BetteSolid 30, side outlet - 0,6 l/s	p. 303	167 €	224 €	224 €
IN	B574-	BetteScope, side outlet - 0,85 l/s	p. 304	174 €	231 €	231 €
IN	B594-	BetteDown, vertical outlet - 0,6 l/s	p. 305	175 €	232 €	232 €

* Please also state code AY or AX, refer to page 5 for order Information.

Accessories

PG	article no.	description	see	price
IN	B57-0373	Sealing System for corner shower trays	p. 356	121 €
IN	B57-0407	Bath divider 3300 × 120 mm	p. 359	33 €

Foot-System BetteCorner

→ p. 351

dimensions in mm	PG	article no.	price
800 × 800	IN	B52-3041	202 €
900 × 900	IN	B52-3051	202 €
1000 × 1000	IN	B52-3064	202 €

Technical information and prices of additional BetteExtras on page 270. You will find the colours in the cover. Subject to alteration and production tolerance. Prices excluding VAT.

BetteCorner 35 mm, different shank length

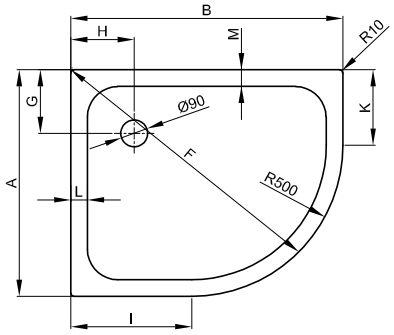

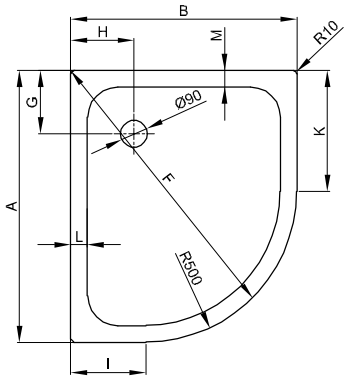

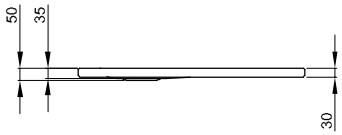

Scope of delivery

Including noise-reducing pads.

Installation height

Waste fittings	from
B598-	123 mm
B597-	103 mm
B574-	115 mm
B594-	55 mm

Dimensions

article no.	dimensions in mm	A	B	F	G	H	I	K	L	M
8119	750 × 900 × 35	750	900	965	210	210	400	250	55	55
5401	800 × 900 × 35	800	900	997	260	210	400	300	55	105
8159	900 × 750 × 35	900	750	965	210	210	250	400	55	55
5404	900 × 800 × 35	900	800	997	210	260	300	400	105	55
5461	900 × 1000 × 35	900	1000	1139	210	210	500	400	70	70
5464	1000 × 900 × 35	1000	900	1139	210	210	400	500	70	70

Subject to alteration and production tolerance.

Dimensions

PG	article no.	dimensions in mm	weight (net)	pcs/pallet	White 000 → cover	coloured → cover
CO	8119	750 × 900 × 35	15.7 kg	40	882 €	977 €
CO	5401	800 × 900 × 35	15.7 kg	40	882 € ☗	977 €
CO	8159	900 × 750 × 35	15.9 kg	40	882 €	977 €
CO	5404	900 × 800 × 35	15.7 kg	40	882 € ☗	977 €
CO	5461	900 × 1000 × 35	20.3 kg	40	1.014 € ☗	1.109 €
CO	5464	1000 × 900 × 35	21 kg	40	1.014 € ☗	1.109 €

Extras

PG	code	description	see	price
EX	AE	BetteAnti-Slip Pro*[1]	p. 272	190 €
EX	AS	BetteAnti-Slip Sense*[1,2]	p. 273	190 €
EX	PLUS	BetteGlaze® Plus	p. 274	160 €
EX		BetteUpstand	p. 280	from 424 €
EX		Profi Corner	p. 284	from 404 €

*[1] Not available with Glaze® Plus.
*[2] Only available in combination with White (000).

Waste fittings

PG	article no.	description	see	Chrome 901	White and coloured → p. 310	White and coloured with Antislip Pro* | White 000 with Anti-Slip Sense*
IN	B598-	BetteSolid 50, side outlet - 0,6 l/s	p. 302	167 €	224 €	224 €
IN	B597-	BetteSolid 30, side outlet - 0,6 l/s	p. 303	167 €	224 €	224 €
IN	B574-	BetteScope, side outlet - 0,85 l/s	p. 304	174 €	231 €	231 €
IN	B594-	BetteDown, vertical outlet - 0,6 l/s	p. 305	175 €	232 €	232 €

* Please also state code AY or AX, refer to page 5 for order Information.

Accessories

PG	article no.	description	see	price
IN	B57-0373	Sealing System for corner shower trays	p. 356	121 €
IN	B57-0407	Bath divider 3300 × 120 mm	p. 359	33 €

Foot-System BetteCorner

→ p. 351

dimensions in mm	PG	article no.	price
750 × 900	IN	B52-3034	202 €
800 × 900	IN	B52-3043	202 €
900 × 1000	IN	B52-3053	202 €

Technical information and prices of additional BetteExtras on page 270. You will find the colours in the cover. Subject to alteration and production tolerance. Prices excluding VAT.

BetteDelta 800 mm - 900 mm

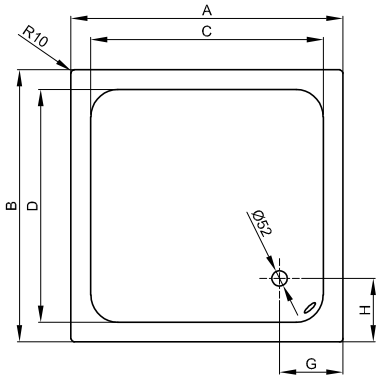

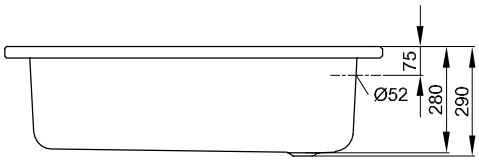

Installation height

Waste fittings	from
B600-	400 mm

Dimensions

article no.	dimensions in mm	A	B	C	D	G	H
5660	800 × 750 × 280	800	750	670	620	210	210
5810	800 × 800 × 280	800	800	670	670	210	210
5740	900 × 700 × 280	900	700	770	570	210	210
5760	900 × 750 × 280	900	750	770	620	210	210
5960	900 × 800 × 280	900	800	770	670	210	210
5910	900 × 900 × 280	900	900	770	770	210	210

Subject to alteration and production tolerance.

Dimensions

PG	article no.	dimensions in mm	weight (net)	pcs/pallet	White 000 → cover	coloured → cover
BA	5660	800 × 750 × 280	22.5 kg	40	434 €	529 €
BA	5810	800 × 800 × 280	22.5 kg	40	434 €	529 €
BA	5740	900 × 700 × 280	20 kg	40	499 €	594 €
BA	5760	900 × 750 × 280	23.6 kg	40	434 €	529 €
BA	5960	900 × 800 × 280	25.8 kg	40	499 €	594 €
BA	5910	900 × 900 × 280	27 kg	40	434 € ☗	529 €

Extras

PG	code	description	see	price
EX	AS	BetteAnti-Slip Sense*1,2	p. 273	190 €
EX	PLUS	BetteGlaze® Plus	p. 274	160 €
EX		BetteUpstand	p. 280	from 424 €
EX		Special size	p. 286	404 €
EX		Profi Corner	p. 284	from 404 €
EX	ADD	Antinoise for shower trays	p. 275	45 €

*1 Not available with Glaze® Plus.
*2 Only available in combination with White (000).

Waste fittings

PG	article no.	description	see	Chrome 901	White 000
IN	B600-	Waste- and overflow fitting Ø 52 mm, 560 mm	p. 312	150 €	180 €

Accessories

PG	article no.	description	see	price
IN	B57-0370	Sealing System for rectangular shower trays	p. 356	110 €
IN	B57-0407	Bath divider 3300 × 120 mm	p. 359	33 €

Technical information and prices of additional BetteExtras on page 270. You will find the colours in the cover. Subject to alteration and production tolerance. Prices excluding VAT.

BetteDelta 1000 mm - 1200 mm

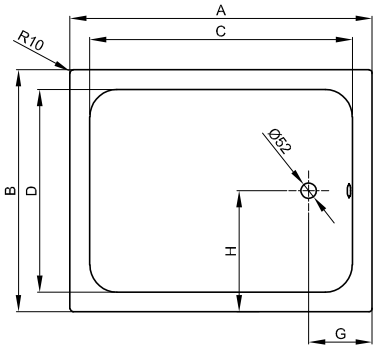

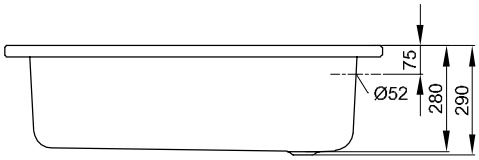

Installation height

Waste fittings	from
B600-	400 mm

Dimensions

article no.	dimensions in mm	A	B	C	D	G	H
5510	1000 × 800 × 280	1000	800	870	670	210	400
5610	1000 × 1000 × 280	1000	1000	870	870	210	500
5860	1200 × 800 × 280	1200	800	1070	670	210	400

Subject to alteration and production tolerance.

Dimensions

PG	article no.	dimensions in mm	weight (net)	pcs/pallet	White 000 → cover	coloured → cover
BA	5510	1000 × 800 × 280	19 kg	40	618 €	713 €
BA	5610	1000 × 1000 × 280	22 kg	40	618 €	713 €
BA	5860	1200 × 800 × 280	32.1 kg	40	698 €	793 €

Extras

PG	code	description	see	price
EX	AS	BetteAnti-Slip Sense*1,2	p. 273	190 €
EX	PLUS	BetteGlaze® Plus	p. 274	160 €
EX		BetteUpstand	p. 280	from 424 €
EX		Special size	p. 286	404 €
EX		Profi Corner	p. 284	from 404 €
EX	ADD	Antinoise for shower trays	p. 275	45 €

*1 Not available with Glaze® Plus.
*2 Only available in combination with White (000).

Waste fittings

PG	article no.	description	see	Chrome 901	White 000
IN	B600-	Waste- and overflow fitting Ø 52 mm, 560 mm	p. 312	150 €	180 €

Accessories

PG	article no.	description	see	price
IN	B57-0370	Sealing System for rectangular shower trays	p. 356	110 €
IN	B57-0407	Bath divider 3300 × 120 mm	p. 359	33 €

Technical information and prices of additional BetteExtras on page 270. You will find the colours in the cover. Subject to alteration and production tolerance. Prices excluding VAT.

BetteQuinta 700 mm - 900 mm

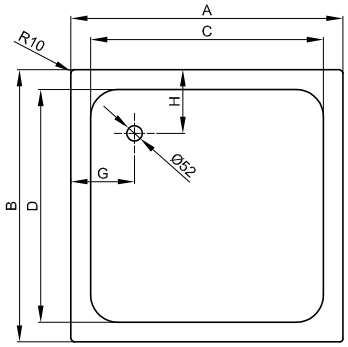

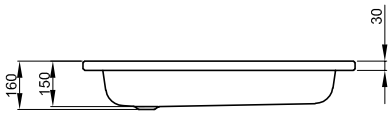

Information

We recommend to use the Foot-System, adjustable from 80 - 200 mm. For Installation height 205 - 325 mm spacers need to be ordered separately.

Installation height

Waste fittings	from
B577-	240 mm

Dimensions

article no.	dimensions in mm	A	B	C	D	G	H
5700	700 × 700 × 150	700	700	570	570	210	210
5370	750 × 700 × 150	750	700	570	570	235	210
5540	750 × 750 × 150	750	750	620	620	210	210
5690	800 × 700 × 150	800	700	670	570	210	210
5650	800 × 750 × 150	800	750	670	620	210	210
5800	800 × 800 × 150	800	800	670	670	210	210
5790	850 × 700 × 150	850	700	670	570	235	210
1910	850 × 750 × 150	850	750	670	620	235	210
1920	850 × 850 × 150	850	850	670	670	235	235
8620	900 × 600 × 150	900	600	770	470	210	210
5730	900 × 700 × 150	900	700	770	570	210	210
5750	900 × 750 × 150	900	750	770	620	210	210
5950	900 × 800 × 150	900	800	770	670	210	210
1900	900 × 850 × 150	900	850	770	670	210	235
5900	900 × 900 × 150	900	900	770	770	210	210

Subject to alteration and production tolerance.

Dimensions

Further dimensions on the following pages.

PG	article no.	dimensions in mm	weight (net)	pcs/pallet	White 000 → cover	coloured → cover
BA	5700	700 × 700 × 150	14.4 kg	40	438 € ☗	533 €
BA	5370	750 × 700 × 150	15.5 kg	40	438 €	533 €
BA	5540	750 × 750 × 150	16.6 kg	40	438 € ☗	533 €
BA	5690	800 × 700 × 150	16.9 kg	40	438 € ☗	533 €
BA	5650	800 × 750 × 150	16.7 kg	40	438 € ☗	533 €
BA	5800	800 × 800 × 150	17.9 kg	40	438 € ☗	533 €
BA	5790	850 × 700 × 150	18 kg	40	438 €	533 €
BA	1910	850 × 750 × 150	18 kg	40	438 €	533 €
BA	1920	850 × 850 × 150	20 kg	40	438 €	533 €
BA	8620	900 × 600 × 150	16.3 kg	40	438 €	533 €
BA	5730	900 × 700 × 150	18.4 kg	40	438 € ☗	533 €
BA	5750	900 × 750 × 150	18.8 kg	40	438 € ☗	533 €
BA	5950	900 × 800 × 150	19.8 kg	40	438 € ☗	533 €
BA	1900	900 × 850 × 150	20 kg	40	438 €	533 €
BA	5900	900 × 900 × 150	21.8 kg	40	438 € ☗	533 €

Extras

PG	code	description	see	price
EX	AS	BetteAnti-Slip Sense*1,2	p. 273	190 €
EX	PLUS	BetteGlaze® Plus	p. 274	160 €
EX		BetteUpstand	p. 280	from 424 €
EX		Special size	p. 286	404 €
EX		Profi Corner	p. 284	from 404 €
EX	ADD	Antinoise for shower trays	p. 275	45 €

*1 Not available with Glaze® Plus.
*2 Only available in combination with White (000).

Waste fittings

PG	article no.	description	see	Chrome 901
IN	B577-	Shower waste Ø 52 mm, lateral	p. 307	73 €

Accessories

PG	article no.	description	see	price
IN	B57-0370	Sealing System for rectangular shower trays	p. 356	110 €
IN	B57-0407	Bath divider 3300 × 120 mm	p. 359	33 €

Foot-System
→ p. 348

Spacer
→ p. 349

dimensions in mm	PG	article no.	price	PG	article no.	price
700 × 700	IN	B50-3020	179 €	IN	B50-0005	53 €
750 × 700	IN	B50-3021	179 €	IN	B50-0005	53 €
750 × 750	IN	B50-3031	179 €	IN	B50-0005	53 €
800 × 700	IN	B50-3022	179 €	IN	B50-0005	53 €
800 × 750	IN	B50-3032	179 €	IN	B50-0005	53 €
800 × 800	IN	B50-3041	179 €	IN	B50-0005	53 €
850 × 700	IN	B50-3023	179 €	IN	B50-0005	53 €
850 × 750	IN	B50-3033	179 €	IN	B50-0005	53 €
850 × 850	IN	B50-3070	179 €	IN	B50-0005	53 €
900 × 600	IN	B50-3073	179 €	IN	B50-0005	53 €
900 × 700	IN	B50-3024	179 €	IN	B50-0005	53 €
900 × 750	IN	B50-3034	179 €	IN	B50-0005	53 €
900 × 800	IN	B50-3043	179 €	IN	B50-0005	53 €
900 × 850	IN	B50-3071	179 €	IN	B50-0005	53 €
900 × 900	IN	B50-3051	179 €	IN	B50-0005	53 €

Technical information and prices of additional BetteExtras on page 270. You will find the colours in the cover. Subject to alteration and production tolerance. Prices excluding VAT.

BetteQuinta 1000 mm - 1200 mm

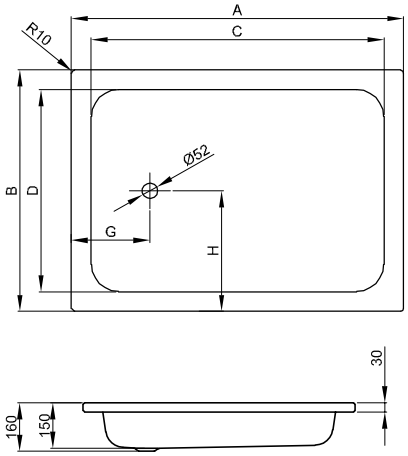

Information

We recommend to use the Foot-System, adjustable from 80 - 200 mm. For Installation height 205 - 325 mm spacers need to be ordered separately.

Installation height

Waste fittings	from
B577-	240 mm

Dimensions

article no.	dimensions in mm	A	B	C	D	G	H
5890	1000 × 700 × 150	1000	700	870	570	210	350
5560	1000 × 750 × 150	1000	750	870	620	210	375
5500	1000 × 800 × 150	1000	800	870	670	210	400
5390	1000 × 900 × 150	1000	900	870	770	210	450
5600	1000 × 1000 × 150	1000	1000	870	870	210	500
8700	1050 × 750 × 150	1050	750	870	620	235	375
8740	1100 × 800 × 150	1100	800	870	670	260	400
8650	1100 × 900 × 150	1100	900	970	770	210	450
5990	1200 × 700 × 150	1200	700	1070	570	210	350
5580	1200 × 750 × 150	1200	750	1070	620	210	375
5850	1200 × 800 × 150	1200	800	1070	670	210	400
1290	1200 × 900 × 150	1200	900	1070	770	210	450
8680	1200 × 1000 × 150	1200	1000	1070	870	210	500
5640	1200 × 1200 × 150	1200	1200	1070	1070	210	600

Subject to alteration and production tolerance.

Dimensions

PG	article no.	dimensions in mm	weight (net)	pcs/pallet	White 000 → cover	coloured → cover
BA	5890	1000 × 700 × 150	20.4 kg	40	604 €	699 €
BA	5560	1000 × 750 × 150	22 kg	40	604 €	699 €
BA	5500	1000 × 800 × 150	22.3 kg	40	604 €	699 €
BA	5390	1000 × 900 × 150	26.2 kg	40	604 € ☗	699 €
BA	5600	1000 × 1000 × 150	27.8 kg	40	628 €	723 €
BA	8700	1050 × 750 × 150	18 kg	40	656 €	751 €
BA	8740	1100 × 800 × 150	19 kg	40	656 €	751 €
BA	8650	1100 × 900 × 150	27.5 kg	40	656 €	751 €
BA	5990	1200 × 700 × 150	24.4 kg	40	710 €	805 €
BA	5580	1200 × 750 × 150	25.1 kg	40	710 €	805 €
BA	5850	1200 × 800 × 150	26.9 kg	40	710 €	805 €
BA	1290	1200 × 900 × 150	19 kg	40	710 €	805 €
BA	8680	1200 × 1000 × 150	32.5 kg	14	765 €	860 €
BA	5640	1200 × 1200 × 150	22 kg	14	765 €	860 €

Extras

PG	code	description	see	price
EX	AS	BetteAnti-Slip Sense*1,2	p. 273	190 €
EX	PLUS	BetteGlaze® Plus	p. 274	160 €
EX		BetteUpstand	p. 280	from 424 €
EX		Special size	p. 286	404 €
EX		Profi Corner	p. 284	from 404 €
EX	ADD	Antinoise for shower trays	p. 275	45 €

*1 Not available with Glaze® Plus.
*2 Only available in combination with White (000).

Waste fittings

PG	article no.	description	see	Chrome 901
IN	B577-	Shower waste Ø 52 mm, lateral	p. 307	73 €

Accessories

PG	article no.	description	see	price
IN	B57-0370	Sealing System for rectangular shower trays	p. 356	110 €
IN	B57-0407	Bath divider 3300 × 120 mm	p. 359	33 €

Foot-System
→ p. 348

Spacer
→ p. 349

dimensions in mm	PG	article no.	price	PG	article no.	price
1000 × 700	IN	B50-3026	179 €	IN	B50-0005	53 €
1000 × 750	IN	B50-3036	179 €	IN	B50-0005	53 €
1000 × 800	IN	B50-3045	179 €	IN	B50-0005	53 €
1000 × 900	IN	B50-3053	179 €	IN	B50-0005	53 €
1000 × 1000	IN	B50-3064	179 €	IN	B50-0005	53 €
1050 × 750	IN	B50-3037	179 €	IN	B50-0005	53 €
1100 × 800	IN	B50-3047	179 €	IN	B50-0005	53 €
1100 × 900	IN	B50-3055	179 €	IN	B50-0005	53 €
1200 × 700	IN	B50-3030	205 €	IN	B50-0006	73 €
1200 × 750	IN	B50-3040	205 €	IN	B50-0006	73 €
1200 × 800	IN	B50-3049	205 €	IN	B50-0006	73 €
1200 × 900	IN	B50-3057	205 €	IN	B50-0006	73 €
1200 × 1000	IN	B50-3074	205 €	IN	B50-0006	73 €
1200 × 1200	IN	B50-3065	205 €	IN	B50-0007	96 €

Technical information and prices of additional BetteExtras on page 270. You will find the colours in the cover. Subject to alteration and production tolerance. Prices excluding VAT.

BetteSupra 700 mm - 850 mm

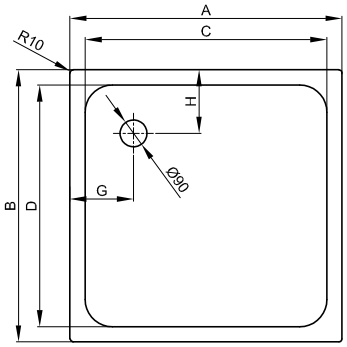

Shower trays < 1000 mm

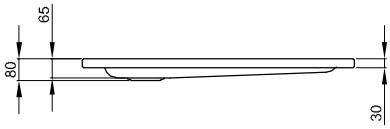

Information

We recommend the combination with the Foot-System, Installation height: 80 - 200 mm.

Scope of delivery

Including noise-reducing pads.

Installation height

Waste fittings	from
B598-	153 mm
B597-	133 mm
B574-	150 mm
B594-	85 mm

Dimensions

article no.	dimensions in mm	A	B	C	D	G	H
5720	700 × 700 × 65	700	700	600	600	210	210
5360	750 × 700 × 65	750	700	600	600	235	210
5530	750 × 750 × 65	750	750	650	650	210	210
5680	800 × 700 × 65	800	700	700	600	210	210
5670	800 × 750 × 65	800	750	700	650	210	210
5820	800 × 800 × 65	800	800	700	700	210	210
5780	850 × 700 × 65	850	700	700	600	235	210
1570	850 × 750 × 65	850	750	700	650	235	210
1590	850 × 850 × 65	850	850	700	700	235	235

Subject to alteration and production tolerance.

Dimensions

Further dimensions on the following pages.

PG	article no.	dimensions in mm	weight (net)	pcs/pallet	White 000 → cover	coloured → cover
CO	5720	700 × 700 × 65	11.8 kg	40	600 € ☗	695 €
CO	5360	750 × 700 × 65	12.7 kg	40	600 €	695 €
CO	5530	750 × 750 × 65	13.6 kg	40	600 € ☗	695 €
CO	5680	800 × 700 × 65	13.6 kg	40	600 € ☗	695 €
CO	5670	800 × 750 × 65	14.6 kg	40	600 € ☗	695 €
CO	5820	800 × 800 × 65	15.4 kg	40	600 € ☗	695 €
CO	5780	850 × 700 × 65	14.4 kg	40	600 €	695 €
CO	1570	850 × 750 × 65	15.4 kg	40	600 € ☗	695 €
CO	1590	850 × 850 × 65	17.4 kg	40	600 € ☗	695 €

Extras

PG	code	description	see	price
EX	AE	BetteAnti-Slip Pro*[1]	p. 272	190 €
EX	AS	BetteAnti-Slip Sense*[1,2]	p. 273	190 €
EX	PLUS	BetteGlaze® Plus	p. 274	160 €
EX		BetteUpstand	p. 280	from 424 €
EX		Special size	p. 286	404 €
EX		Profi Corner	p. 284	from 404 €

*[1] Not available with Glaze® Plus.
*[2] Only available in combination with White (000).

Waste fittings

PG	article no.	description	see	Chrome 901	White and coloured → p. 310	White and coloured with Antislip Pro* | White 000 with Anti-Slip Sense*
IN	B598-	BetteSolid 50, side outlet - 0,6 l/s	p. 302	167 €	224 €	224 €
IN	B597-	BetteSolid 30, side outlet - 0,6 l/s	p. 303	167 €	224 €	224 €
IN	B574-	BetteScope, side outlet - 0,85 l/s	p. 304	174 €	231 €	231 €
IN	B594-	BetteDown, vertical outlet - 0,6 l/s	p. 305	175 €	232 €	232 €

* Please also state code AY or AX, refer to page 5 for order Information.

Accessories

PG	article no.	description	see	price
IN	B57-0370	Sealing System for rectangular shower trays	p. 356	110 €
IN	B57-0407	Bath divider 3300 × 120 mm	p. 359	33 €

Foot-System

→ p. 348

dimensions in mm	PG	article no.	price
700 × 700	IN	B50-3020	179 €
750 × 700	IN	B50-3021	179 €
750 × 750	IN	B50-3031	179 €
800 × 700	IN	B50-3022	179 €
800 × 750	IN	B50-3032	179 €
800 × 800	IN	B50-3041	179 €
850 × 700	IN	B50-3023	179 €
850 × 750	IN	B50-3033	179 €
850 × 850	IN	B50-3070	179 €

Technical information and prices of additional BetteExtras on page 270. You will find the colours in the cover. Subject to alteration and production tolerance. Prices excluding VAT.

BetteSupra = 900 mm

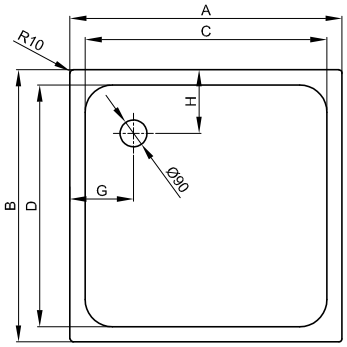

Shower trays < 1000 mm

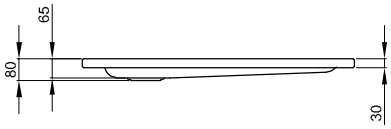

Information

We recommend the combination with the Foot-System, Installation height: 80 - 200 mm.

Scope of delivery

Including noise-reducing pads.

Installation height

Waste fittings	from
B598-	153 mm
B597-	133 mm
B574-	150 mm
B594-	85 mm

Dimensions

article no.	dimensions in mm	A	B	C	D	G	H
8610	900 × 600 × 65	900	600	800	500	210	210
5710	900 × 700 × 65	900	700	800	600	210	210
5770	900 × 750 × 65	900	750	800	650	210	210
5970	900 × 800 × 65	900	800	800	700	210	210
1560	900 × 850 × 65	900	850	800	700	210	235
5920	900 × 900 × 65	900	900	800	800	210	210

Subject to alteration and production tolerance.

Dimensions

Further dimensions on the following pages.

PG	article no.	dimensions in mm	weight (net)	pcs/pallet	White 000 → cover	coloured → cover
CO	8610	900 × 600 × 65	13.6 kg	40	600 €	695 €
CO	5710	900 × 700 × 65	15.2 kg	40	600 € ☗	695 €
CO	5770	900 × 750 × 65	16 kg	40	600 € ☗	695 €
CO	5970	900 × 800 × 65	17 kg	40	600 € ☗	695 €
CO	1560	900 × 850 × 65	18 kg	40	600 € ☗	695 €
CO	5920	900 × 900 × 65	19.2 kg	40	600 € ☗	695 €

Extras

PG	code	description	see	price
EX	AE	BetteAnti-Slip Pro*[1]	p. 272	190 €
EX	AS	BetteAnti-Slip Sense*[1,2]	p. 273	190 €
EX	PLUS	BetteGlaze® Plus	p. 274	160 €
EX		BetteUpstand	p. 280	from 424 €
EX		Special size	p. 286	404 €
EX		Profi Corner	p. 284	from 404 €

*[1] Not available with Glaze® Plus.
*[2] Only available in combination with White (000).

Waste fittings

PG	article no.	description	see	Chrome 901	White and coloured → p. 310	White and coloured with Antislip Pro* | White 000 with Anti-Slip Sense*
IN	B598-	BetteSolid 50, side outlet - 0,6 l/s	p. 302	167 €	224 €	224 €
IN	B597-	BetteSolid 30, side outlet - 0,6 l/s	p. 303	167 €	224 €	224 €
IN	B574-	BetteScope, side outlet - 0,85 l/s	p. 304	174 €	231 €	231 €
IN	B594-	BetteDown, vertical outlet - 0,6 l/s	p. 305	175 €	232 €	232 €

* Please also state code AY or AX, refer to page 5 for order Information.

Accessories

PG	article no.	description	see	price
IN	B57-0370	Sealing System for rectangular shower trays	p. 356	110 €
IN	B57-0407	Bath divider 3300 × 120 mm	p. 359	33 €

Foot-System

→ p. 348

dimensions in mm	PG	article no.	price
900 × 600	IN	B50-3073	179 €
900 × 700	IN	B50-3024	179 €
900 × 750	IN	B50-3034	179 €
900 × 800	IN	B50-3043	179 €
900 × 850	IN	B50-3071	179 €
900 × 900	IN	B50-3051	179 €

Technical information and prices of additional BetteExtras on page 270. You will find the colours in the cover. Subject to alteration and production tolerance. Prices excluding VAT.

BetteSupra 1000 mm - 1100 mm

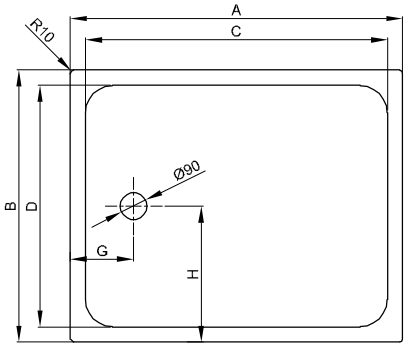

Shower trays ≥ 1000 mm

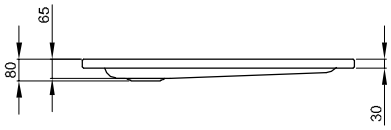

Information

We recommend the combination with the Foot-System, Installation height: 80 - 200 mm.

Scope of delivery

Including noise-reducing pads.

Installation height

Waste fittings	from
B598-	153 mm
B597-	133 mm
B574-	150 mm
B594-	85 mm

Dimensions

article no.	dimensions in mm	A	B	C	D	G	H
5880	1000 × 700 × 65	1000	700	900	600	210	350
5550	1000 × 750 × 65	1000	750	900	650	210	375
5520	1000 × 800 × 65	1000	800	900	700	210	400
5380	1000 × 900 × 65	1000	900	900	800	210	450
5620	1000 × 1000 × 65	1000	1000	900	900	210	500
8690	1050 × 750 × 65	1050	750	900	650	235	375
8726	1100 × 700 × 65	1100	700	1000	600	210	350
8728	1100 × 750 × 65	1100	750	1000	650	210	375
8730	1100 × 800 × 65	1100	800	900	700	260	400
8640	1100 × 900 × 65	1100	900	1000	800	210	450
8738	1100 × 1000 × 65	1100	1000	1000	900	210	500
8744	1100 × 1100 × 65	1100	1100	1000	1000	210	550

Subject to alteration and production tolerance.

Dimensions

Further dimensions on the following pages.

PG	article no.	dimensions in mm	weight (net)	pcs/pallet	White 000 → cover	coloured → cover
CO	5880	1000 × 700 × 65	17.1 kg	40	719 € ☗	814 €
CO	5550	1000 × 750 × 65	16.7 kg	40	719 € ☗	814 €
CO	5520	1000 × 800 × 65	19.1 kg	40	719 € ☗	814 €
CO	5380	1000 × 900 × 65	21.8 kg	40	719 € ☗	814 €
CO	5620	1000 × 1000 × 65	24.7 kg	40	719 € ☗	814 €
CO	8690	1050 × 750 × 65	19 kg	40	750 €	845 €
CO	8726	1100 × 700 × 65	17.5 kg	40	750 €	845 €
CO	8728	1100 × 750 × 65	19.5 kg	40	750 € ☗	845 €
CO	8730	1100 × 800 × 65	20.9 kg	40	750 € ☗	845 €
CO	8640	1100 × 900 × 65	23.4 kg	40	750 € ☗	845 €
CO	8738	1100 × 1000 × 65	25 kg	40	780 €	875 €
CO	8744	1100 × 1100 × 65	28 kg	40	780 €	875 €

Extras

PG	code	description	see	price
EX	AE	BetteAnti-Slip Pro*[1]	p. 272	190 €
EX	AS	BetteAnti-Slip Sense*[1,2]	p. 273	190 €
EX	PLUS	BetteGlaze® Plus	p. 274	160 €
EX		BetteUpstand	p. 280	from 424 €
EX		Special size	p. 286	404 €
EX		Profi Corner	p. 284	from 404 €

*[1] Not available with Glaze® Plus.
*[2] Only available in combination with White (000).

Waste fittings

PG	article no.	description	see	Chrome 901	White and coloured → p. 310	White and coloured with Antislip Pro* | White 000 with Anti-Slip Sense*
IN	B598-	BetteSolid 50, side outlet - 0,6 l/s	p. 302	167 €	224 €	224 €
IN	B597-	BetteSolid 30, side outlet - 0,6 l/s	p. 303	167 €	224 €	224 €
IN	B574-	BetteScope, side outlet - 0,85 l/s	p. 304	174 €	231 €	231 €
IN	B594-	BetteDown, vertical outlet - 0,6 l/s	p. 305	175 €	232 €	232 €

* Please also state code AY or AX, refer to page 5 for order Information.

Accessories

PG	article no.	description	see	price
IN	B57-0370	Sealing System for rectangular shower trays	p. 356	110 €
IN	B57-0407	Bath divider 3300 × 120 mm	p. 359	33 €

Foot-System

→ p. 348

dimensions in mm	PG	article no.	price
1000 × 700	IN	B50-3026	179 €
1000 × 750	IN	B50-3036	179 €
1000 × 800	IN	B50-3045	179 €
1000 × 900	IN	B50-3053	179 €
1000 × 1000	IN	B50-3064	179 €
1050 × 750	IN	B50-3037	179 €
1100 × 700	IN	B50-3025	179 €
1100 × 750	IN	B50-3027	179 €
1100 × 800	IN	B50-3047	179 €
1100 × 900	IN	B50-3055	179 €
1100 × 1000	IN	B50-3028	179 €
1100 × 1100	IN	B50-3029	179 €

Technical information and prices of additional BetteExtras on page 270. You will find the colours in the cover. Subject to alteration and production tolerance. Prices excluding VAT.

BetteSupra 1200 mm - 1300 mm

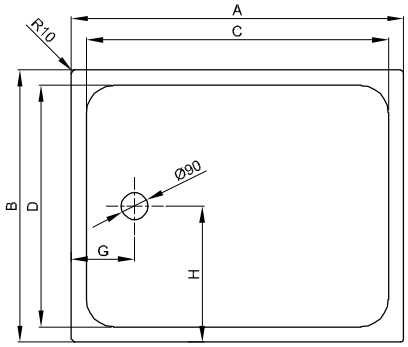

Shower trays ≥ 1000 mm

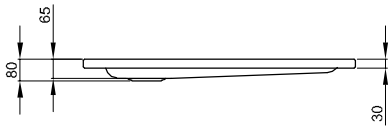

Information

We recommend the combination with the Foot-System, Installation height: 80 - 200 mm.

Scope of delivery

Including noise-reducing pads.

Installation height

Waste fittings	from
B598-	153 mm
B597-	133 mm
B574-	150 mm
B594-	85 mm

Dimensions

article no.	dimensions in mm	A	B	C	D	G	H
5980	1200 × 700 × 65	1200	700	1100	600	210	350
5570	1200 × 750 × 65	1200	750	1100	650	210	375
5870	1200 × 800 × 65	1200	800	1100	700	210	400
1690	1200 × 900 × 65	1200	900	1100	800	210	450
8670	1200 × 1000 × 65	1200	1000	1100	900	210	500
8665	1200 × 1100 × 65	1200	1100	1100	1000	210	550
5630	1200 × 1200 × 65	1200	1200	1100	1100	210	600
5787	1300 × 800 × 65	1300	800	1200	700	210	400
5796	1300 × 900 × 65	1300	900	1200	800	210	450
5789	1300 × 1000 × 65	1300	1000	1200	900	210	500
5827	1300 × 1300 × 65	1300	1300	1200	1200	210	650

Subject to alteration and production tolerance.

Dimensions

Further dimensions on the following pages.

PG	article no.	dimensions in mm	weight (net)	pcs/pallet	White 000 → cover	coloured → cover
CO	5980	1200 × 700 × 65	20.3 kg	40	845 €	940 €
CO	5570	1200 × 750 × 65	21.7 kg	40	845 € ☗	940 €
CO	5870	1200 × 800 × 65	22.8 kg	40	845 € ☗	940 €
CO	1690	1200 × 900 × 65	25.6 kg	40	845 € ☗	940 €
CO	8670	1200 × 1000 × 65	19 kg	14	845 €	940 €
CO	8665	1200 × 1100 × 65	30.5 kg	14	845 €	940 €
CO	5630	1200 × 1200 × 65	32.9 kg	14	845 €	940 €
CO	5787	1300 × 800 × 65	25.8 kg	14	845 € ☗	940 €
CO	5796	1300 × 900 × 65	28 kg	14	845 €	940 €
CO	5789	1300 × 1000 × 65	32 kg	14	845 €	940 €
CO	5827	1300 × 1300 × 65	38.1 kg	14	909 €	1.004 €

Extras

PG	code	description	see	price
EX	AE	BetteAnti-Slip Pro*[1]	p. 272	190 €
EX	AS	BetteAnti-Slip Sense*[1,2]	p. 273	190 €
EX	PLUS	BetteGlaze® Plus	p. 274	160 €
EX		BetteUpstand	p. 280	from 424 €
EX		Special size	p. 286	404 €
EX		Profi Corner	p. 284	from 404 €

*[1] Not available with Glaze® Plus.
*[2] Only available in combination with White (000).

Waste fittings

PG	article no.	description	see	Chrome 901	White and coloured → p. 310	White and coloured with Antislip Pro* | White 000 with Anti-Slip Sense*
IN	B598-	BetteSolid 50, side outlet - 0,6 l/s	p. 302	167 €	224 €	224 €
IN	B597-	BetteSolid 30, side outlet - 0,6 l/s	p. 303	167 €	224 €	224 €
IN	B574-	BetteScope, side outlet - 0,85 l/s	p. 304	174 €	231 €	231 €
IN	B594-	BetteDown, vertical outlet - 0,6 l/s	p. 305	175 €	232 €	232 €

* Please also state code AY or AX, refer to page 5 for order Information.

Accessories

PG	article no.	description	see	price
IN	B57-0370	Sealing System for rectangular shower trays	p. 356	110 €
IN	B57-0407	Bath divider 3300 × 120 mm	p. 359	33 €

Foot-System

→ p. 348

dimensions in mm	PG	article no.	price
1200 × 700	IN	B50-3030	205 €
1200 × 750	IN	B50-3040	205 €
1200 × 800	IN	B50-3049	205 €
1200 × 900	IN	B50-3057	205 €
1200 × 1000	IN	B50-3074	205 €
1200 × 1100	IN	B50-3035	205 €
1200 × 1200	IN	B50-3065	205 €
1300 × 800	IN	B50-3060	205 €
1300 × 900	IN	B50-3038	205 €
1300 × 1000	IN	B50-3061	205 €
1300 × 1300	IN	B50-3092	224 €

Technical information and prices of additional BetteExtras on page 270. You will find the colours in the cover. Subject to alteration and production tolerance. Prices excluding VAT.

BetteSupra 1400 mm - 1500 mm

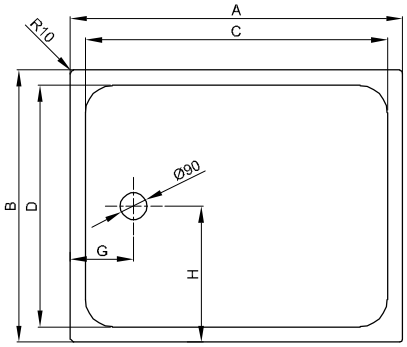

Shower trays ≥ 1000 mm

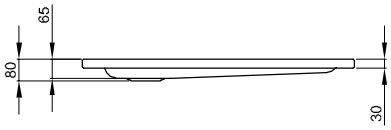

Information

We recommend the combination with the Foot-System, Installation height: 80 - 200 mm.

Dimension 1500 × 1500 mm is not available with BetteUpstand or in special size.

Scope of delivery

Including noise-reducing pads.

Installation height

Waste fittings	from
B598-	153 mm
B597-	133 mm
B574-	150 mm
B594-	85 mm

Dimensions

article no.	dimensions in mm	A	B	C	D	G	H
5825	1400 × 700 × 65	1400	700	1300	600	210	350
5815	1400 × 750 × 65	1400	750	1300	600	210	375
5805	1400 × 800 × 65	1400	800	1300	700	210	400
5835	1400 × 900 × 65	1400	900	1300	800	210	450
5839	1400 × 1000 × 65	1400	1000	1300	900	210	500
5829	1400 × 1400 × 65	1400	1400	1300	1300	210	700
5915	1500 × 700 × 65	1500	700	1400	600	210	350
5925	1500 × 750 × 65	1500	750	1400	600	210	375
5933	1500 × 800 × 65	1500	800	1400	700	210	400
5935	1500 × 900 × 65	1500	900	1400	800	210	450
5945	1500 × 1000 × 65	1500	1000	1400	900	210	500
5985	1500 × 1500 × 65	1500	1500	1400	1400	210	750

Subject to alteration and production tolerance.

Dimensions

Further dimensions on the following pages.

PG	article no.	dimensions in mm	weight (net)	pcs/pallet	White 000 → cover	coloured → cover
CO	5825	1400 × 700 × 65	24.1 kg	14	877 €	972 €
CO	5815	1400 × 750 × 65	24 kg	14	877 €	972 €
CO	5805	1400 × 800 × 65	27.1 kg	14	877 € ☗	972 €
CO	5835	1400 × 900 × 65	29.5 kg	14	877 € ☗	972 €
CO	5839	1400 × 1000 × 65	32.5 kg	14	877 €	972 €
CO	5829	1400 × 1400 × 65	43.8 kg	14	975 €	1.070 €
CO	5915	1500 × 700 × 65	24.5 kg	14	877 €	972 €
CO	5925	1500 × 750 × 65	19 kg	14	877 €	972 €
CO	5933	1500 × 800 × 65	29 kg	14	877 €	972 €
CO	5935	1500 × 900 × 65	32.3 kg	14	877 €	972 €
CO	5945	1500 × 1000 × 65	35 kg	14	877 €	972 €
CO	5985	1500 × 1500 × 65	53.5 kg	5	1.040 €	1.135 €

Extras

PG	code	description	see	price
EX	AE	BetteAnti-Slip Pro*[1]	p. 272	190 €
EX	AS	BetteAnti-Slip Sense*[1,2]	p. 273	190 €
EX	PLUS	BetteGlaze® Plus	p. 274	160 €
EX		BetteUpstand	p. 280	from 424 €
EX		Special size	p. 286	404 €
EX		Profi Corner	p. 284	from 404 €

*[1] Not available with Glaze® Plus.
*[2] Only available in combination with White (000).

Waste fittings

PG	article no.	description	see	Chrome 901	White and coloured → p. 310	White and coloured with Antislip Pro* | White 000 with Anti-Slip Sense*
IN	B598-	BetteSolid 50, side outlet - 0,6 l/s	p. 302	167 €	224 €	224 €
IN	B597-	BetteSolid 30, side outlet - 0,6 l/s	p. 303	167 €	224 €	224 €
IN	B574-	BetteScope, side outlet - 0,85 l/s	p. 304	174 €	231 €	231 €
IN	B594-	BetteDown, vertical outlet - 0,6 l/s	p. 305	175 €	232 €	232 €

* Please also state code AY or AX, refer to page 5 for order Information.

Accessories

PG	article no.	description	see	price
IN	B57-0370	Sealing System for rectangular shower trays	p. 356	110 €
IN	B57-0407	Bath divider 3300 × 120 mm	p. 359	33 €

Foot-System

→ p. 348

dimensions in mm	PG	article no.	price
1400 × 700	IN	B50-3058	224 €
1400 × 750	IN	B50-3059	224 €
1400 × 800	IN	B50-3050	224 €
1400 × 900	IN	B50-3062	224 €
1400 × 1000	IN	B50-3039	224 €
1400 × 1400	IN	B50-3093	252 €
1500 × 700	IN	B50-3075	224 €
1500 × 750	IN	B50-3076	224 €
1500 × 800	IN	B50-3079	224 €
1500 × 900	IN	B50-3077	224 €
1500 × 1000	IN	B50-3078	224 €
1500 × 1500	IN	B50-3080	252 €

Technical information and prices of additional BetteExtras on page 270. You will find the colours in the cover. Subject to alteration and production tolerance. Prices excluding VAT.

BetteSupra 1600 mm - 1800 mm

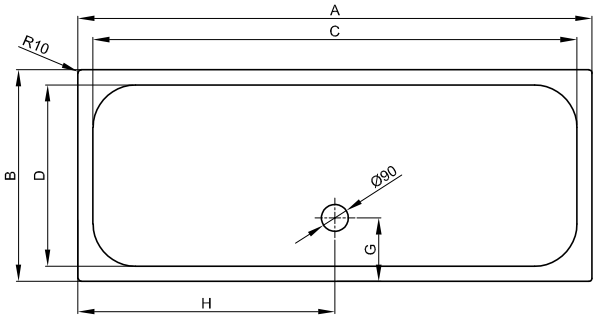

shower trays with dimension ≥ 1600 mm are delivered with waste positioned in centre of long shank.

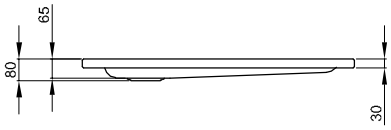

Information

We recommend the combination with the Foot-System, Installation height: 80 - 200 mm.

Scope of delivery

Including noise-reducing pads.

Installation height

Waste fittings	from
B598-	153 mm
B597-	133 mm
B574-	150 mm
B594-	85 mm

Dimensions

article no.	dimensions in mm	A	B	C	D	G	H
5952	1600 × 700 × 65	1600	700	1500	600	210	800
5954	1600 × 750 × 65	1600	750	1500	650	210	800
5956	1600 × 800 × 65	1600	800	1500	700	210	800
5962	1600 × 900 × 65	1600	900	1500	800	210	800
5968	1600 × 1000 × 65	1600	1000	1500	900	210	800
5993	1700 × 700 × 65	1700	700	1600	600	210	850
5997	1700 × 750 × 65	1700	750	1600	700	210	850
5972	1700 × 800 × 65	1700	800	1600	700	210	850
5999	1700 × 900 × 65	1700	900	1600	800	210	850
5807	1700 × 1000 × 65	1700	1000	1600	900	210	850
5987	1800 × 800 × 65	1800	800	1700	700	210	900
5983	1800 × 900 × 65	1800	900	1700	800	210	900
5809	1800 × 1000 × 65	1800	1000	1700	900	210	900

Subject to alteration and production tolerance.

Dimensions

PG	article no.	dimensions in mm	weight (net)	pcs/pallet	White 000 → cover	coloured → cover
CO	5952	1600 × 700 × 65	26 kg	14	877 €	972 €
CO	5954	1600 × 750 × 65	29.5 kg	14	877 €	972 €
CO	5956	1600 × 800 × 65	30.9 kg	14	877 €	972 €
CO	5962	1600 × 900 × 65	33.5 kg	14	877 €	972 €
CO	5968	1600 × 1000 × 65	35.5 kg	14	911 €	1.006 €
CO	5993	1700 × 700 × 65	28 kg	14	910 €	1.005 €
CO	5997	1700 × 750 × 65	30.5 kg	14	910 €	1.005 €
CO	5972	1700 × 800 × 65	31.25 kg	14	910 €	1.005 €
CO	5999	1700 × 900 × 65	34.3 kg	14	910 €	1.005 €
CO	5807	1700 × 1000 × 65	40 kg	14	945 €	1.040 €
CO	5987	1800 × 800 × 65	33.8 kg	14	945 €	1.040 €
CO	5983	1800 × 900 × 65	38.6 kg	14	945 €	1.040 €
CO	5809	1800 × 1000 × 65	40.5 kg	14	945 €	1.040 €

Extras

PG	code	description	see	price
EX	AE	BetteAnti-Slip Pro*[1]	p. 272	190 €
EX	AS	BetteAnti-Slip Sense*[1,2]	p. 273	190 €
EX	PLUS	BetteGlaze® Plus	p. 274	160 €
EX		BetteUpstand	p. 280	from 424 €
EX		Special size	p. 286	404 €
EX		Profi Corner	p. 284	from 404 €

*[1] Not available with Glaze® Plus.
*[2] Only available in combination with White (000).

Waste fittings

PG	article no.	description	see	Chrome 901	White and coloured → p. 310	White and coloured with Antislip Pro* | White 000 with Anti-Slip Sense*
IN	B598-	BetteSolid 50, side outlet - 0,6 l/s	p. 302	167 €	224 €	224 €
IN	B597-	BetteSolid 30, side outlet - 0,6 l/s	p. 303	167 €	224 €	224 €
IN	B574-	BetteScope, side outlet - 0,85 l/s	p. 304	174 €	231 €	231 €
IN	B594-	BetteDown, vertical outlet - 0,6 l/s	p. 305	175 €	232 €	232 €

* Please also state code AY or AX, refer to page 5 for order Information.

Accessories

PG	article no.	description	see	price
IN	B57-0370	Sealing System for rectangular shower trays	p. 356	110 €
IN	B57-0407	Bath divider 3300 × 120 mm	p. 359	33 €

Foot-System

→ p. 348

dimensions in mm	PG	article no.	price
1600 × 700	IN	B50-3042	252 €
1600 × 750	IN	B50-3044	252 €
1600 × 800	IN	B50-3066	252 €
1600 × 900	IN	B50-3046	252 €
1600 × 1000	IN	B50-3068	252 €
1700 × 700	IN	B50-3081	252 €
1700 × 750	IN	B50-3082	252 €
1700 × 800	IN	B50-3063	252 €
1700 × 900	IN	B50-3048	252 €
1700 × 1000	IN	B50-3089	252 €
1800 × 800	IN	B50-3069	252 €
1800 × 900	IN	B50-3052	252 €
1800 × 1000	IN	B50-3091	252 €

Technical information and prices of additional BetteExtras on page 270. You will find the colours in the cover. Subject to alteration and production tolerance. Prices excluding VAT.

BetteSupra with polystyrene support

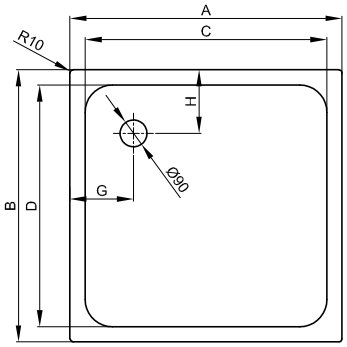

Shower trays < 1000 mm

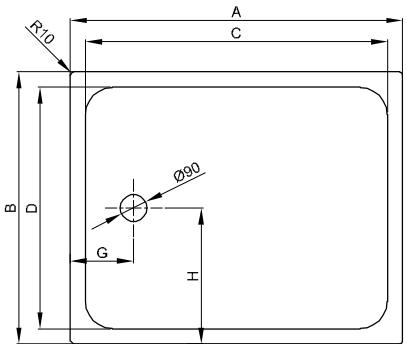

Shower trays ≥ 1000 mm

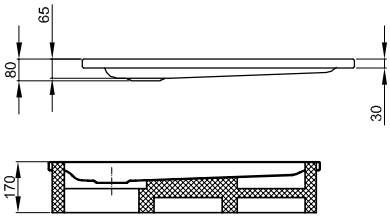

Scope of delivery

Shower tray with pre-assembled supporting elements in expanded polystyrene (EPS)

Including noise-reducing pads.

Installation height

Waste fittings	from
B598-	170 mm
B597-	170 mm
B574-	170 mm
B594-	85 mm

Dimensions

article no.	dimensions in mm	A	B	C	D	G	H
5820 T	800 × 800 × 65	800	800	700	700	210	210
5710 T	900 × 700 × 65	900	700	800	600	210	210
5770 T	900 × 750 × 65	900	750	800	650	210	210
5920 T	900 × 900 × 65	900	900	800	800	210	210
5520 T	1000 × 800 × 65	1000	800	900	700	210	210
5620 T	1000 × 1000 × 65	1000	1000	900	900	210	210

Subject to alteration and production tolerance.

Dimensions

PG	article no.	dimensions in mm	weight (net)	pcs/pallet	White 000 → cover	coloured → cover
CO	5820 T	800 × 800 × 65	16.7 kg	10	696 €	791 €
CO	5710 T	900 × 700 × 65	16.7 kg	10	696 €	791 €
CO	5770 T	900 × 750 × 65	17.8 kg	10	696 €	791 €
CO	5920 T	900 × 900 × 65	19.6 kg	10	696 €	791 €
CO	5520 T	1000 × 800 × 65	20.1 kg	10	815 €	910 €
CO	5620 T	1000 × 1000 × 65	25.7 kg	10	815 €	910 €

Please note the ordering information on page 5.

Extras

PG	code	description	see	price
EX	AE	BetteAnti-Slip Pro*[1]	p. 272	190 €
EX	AS	BetteAnti-Slip Sense*[1,2]	p. 273	190 €
EX	PLUS	BetteGlaze® Plus	p. 274	160 €
EX		BetteUpstand	p. 280	from 424 €

*[1] Not available with Glaze® Plus.
*[2] Only available in combination with White (000).

Waste fittings

PG	article no.	description	see	Chrome 901	White and coloured → p. 310	White and coloured with Antislip Pro* | White 000 with Anti-Slip Sense*
IN	B598-	BetteSolid 50, side outlet - 0,6 l/s	p. 302	167 €	224 €	224 €
IN	B597-	BetteSolid 30, side outlet - 0,6 l/s	p. 303	167 €	224 €	224 €
IN	B574-	BetteScope, side outlet - 0,85 l/s	p. 304	174 €	231 €	231 €
IN	B594-	BetteDown, vertical outlet - 0,6 l/s	p. 305	175 €	232 €	232 €

* Please also state code AY or AX, refer to page 5 for order Information.

Accessories

PG	article no.	description	see	price
IN	B57-0370	Sealing System for rectangular shower trays	p. 356	110 €

Technical information and prices of additional BetteExtras on page 270. You will find the colours in the cover. Subject to alteration and production tolerance. Prices excluding VAT.

BetteUltra 700 mm - 850 mm

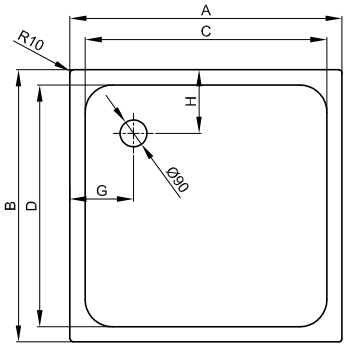

Shower trays < 1000 mm

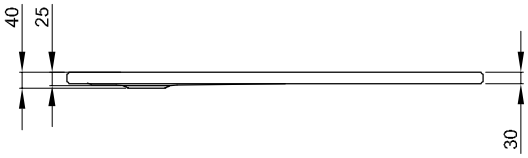

Shower trays < 1000 mm

Illustration with pre-assembled Minimum support (T1).

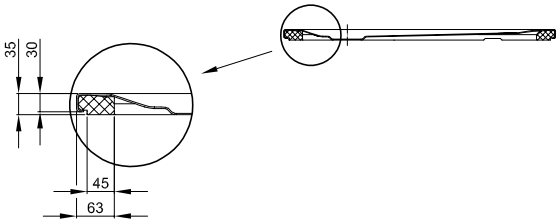

Illustration with pre-assembled Minimum support (T1).

Scope of delivery

Including noise-reducing pads.

Installation height

Waste fittings	from
B598-	113 mm
B597-	93 mm
B574-	110 mm
B594-	45 mm

Dimensions

article no.	dimensions in mm	A	B	C	D	G	H
5719	700 × 700 × 25	700	700	600	600	210	210
5529	750 × 750 × 25	750	750	650	650	210	210
5679	800 × 700 × 25	800	700	700	600	210	210
5669	800 × 750 × 25	800	750	700	650	210	210
5830	800 × 800 × 25	800	800	700	700	210	210
1589	850 × 850 × 25	850	850	700	700	235	235

Subject to alteration and production tolerance.

Dimensions

Further dimensions on the following pages.

PG	article no.	dimensions in mm	weight (net)	pcs/pallet	White 000 → cover	coloured → cover
CO	5719	700 × 700 × 25	11.8 kg	40	627 € ☗	722 €
CO	5529	750 × 750 × 25	13.4 kg	40	627 € ☗	722 €
CO	5679	800 × 700 × 25	13.5 kg	40	627 € ☗	722 €
CO	5669	800 × 750 × 25	14.5 kg	40	627 € ☗	722 €
CO	5830	800 × 800 × 25	15.3 kg	40	627 € ☗	722 €
CO	1589	850 × 850 × 25	16.5 kg	40	627 € ☗	722 €

Extras

PG	code	description	see	price
EX	AE	BetteAnti-Slip Pro*[1]	p. 272	190 €
EX	AS	BetteAnti-Slip Sense*[1,2]	p. 273	190 €
EX	PLUS	BetteGlaze® Plus	p. 274	160 €
EX	T1	Minimum tray support (pre-assembled at factory) for shower trays and shower areas	p. 277	79 €
EX		BetteUpstand	p. 280	from 424 €
EX		Special size	p. 286	404 €
EX		Profi Corner	p. 284	from 404 €

*[1] Not available with Glaze® Plus.
*[2] Only available in combination with White (000).

Waste fittings

PG	article no.	description	see	Chrome 901	White and coloured → p. 310	White and coloured with Antislip Pro* | White 000 with Anti-Slip Sense*
IN	B598-	BetteSolid 50, side outlet - 0,6 l/s	p. 302	167 €	224 €	224 €
IN	B597-	BetteSolid 30, side outlet - 0,6 l/s	p. 303	167 €	224 €	224 €
IN	B574-	BetteScope, side outlet - 0,85 l/s	p. 304	174 €	231 €	231 €
IN	B594-	BetteDown, vertical outlet - 0,6 l/s	p. 305	175 €	232 €	232 €

* Please also state code AY or AX, refer to page 5 for order Information.

Accessories

PG	article no.	description	see	price
IN	B57-0370	Sealing System for rectangular shower trays	p. 356	110 €
IN	B57-0375	Sealing system onto wooden floor	p. 356	142 €
IN	B57-0407	Bath divider 3300 × 120 mm	p. 359	33 €
IN	Z0008669	Wall Brackets	p. 360	40 €
IN	B57-0404	Minimum Support Flex for shower trays 25 mm & shower areas	p. 347	57 €

Foot-System

→ p. 348

dimensions in mm	PG	article no.	price
700 × 700	IN	B50-3020	179 €
750 × 750	IN	B50-3031	179 €
800 × 700	IN	B50-3022	179 €
800 × 750	IN	B50-3032	179 €
800 × 800	IN	B50-3041	179 €
850 × 850	IN	B50-3070	179 €

Technical information and prices of additional BetteExtras on page 270. You will find the colours in the cover. Subject to alteration and production tolerance. Prices excluding VAT.

BetteUltra = 900 mm

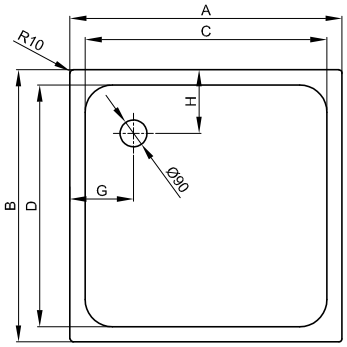

Shower trays < 1000 mm

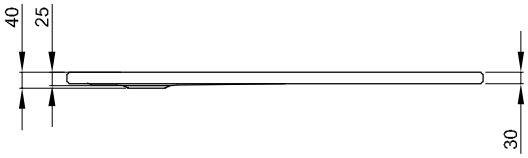

Shower trays < 1000 mm

Illustration with pre-assembled Minimum support (T1).

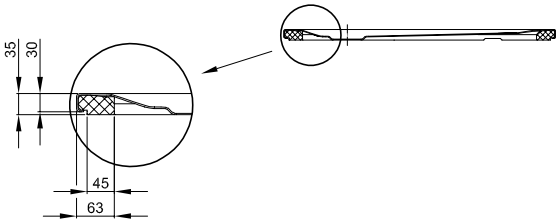

Illustration with pre-assembled Minimum support (T1).

Scope of delivery

Including noise-reducing pads.

Installation height

Waste fittings	from
B598-	113 mm
B597-	93 mm
B574-	110 mm
B594-	45 mm

Dimensions

article no.	dimensions in mm	A	B	C	D	G	H
8600	900 × 600 × 25	900	600	800	500	210	210
5709	900 × 700 × 25	900	700	800	600	210	210
5840	900 × 750 × 25	900	750	800	650	210	210
8750	900 × 800 × 25	900	800	800	700	210	210
1559	900 × 850 × 25	900	850	800	700	210	235
5930	900 × 900 × 25	900	900	800	800	210	210

Subject to alteration and production tolerance.

Dimensions

Further dimensions on the following pages.

PG	article no.	dimensions in mm	weight (net)	pcs/pallet	White 000 → cover	coloured → cover
CO	8600	900 × 600 × 25	13 kg	40	627 €	722 €
CO	5709	900 × 700 × 25	14.9 kg	40	627 € ☗	722 €
CO	5840	900 × 750 × 25	16 kg	40	627 € ☗	722 €
CO	8750	900 × 800 × 25	16.8 kg	40	627 € ☗	722 €
CO	1559	900 × 850 × 25	18 kg	40	627 € ☗	722 €
CO	5930	900 × 900 × 25	18.8 kg	40	627 € ☗	722 €

Extras

PG	code	description	see	price
EX	AE	BetteAnti-Slip Pro*[1]	p. 272	190 €
EX	AS	BetteAnti-Slip Sense*[1,2]	p. 273	190 €
EX	PLUS	BetteGlaze® Plus	p. 274	160 €
EX	T1	Minimum tray support (pre-assembled at factory) for shower trays and shower areas	p. 277	79 €
EX		BetteUpstand	p. 280	from 424 €
EX		Special size	p. 286	404 €
EX		Profi Corner	p. 284	from 404 €

*[1] Not available with Glaze® Plus.
*[2] Only available in combination with White (000).

Waste fittings

PG	article no.	description	see	Chrome 901	White and coloured → p. 310	White and coloured with Antislip Pro* | White 000 with Anti-Slip Sense*
IN	B598-	BetteSolid 50, side outlet - 0,6 l/s	p. 302	167 €	224 €	224 €
IN	B597-	BetteSolid 30, side outlet - 0,6 l/s	p. 303	167 €	224 €	224 €
IN	B574-	BetteScope, side outlet - 0,85 l/s	p. 304	174 €	231 €	231 €
IN	B594-	BetteDown, vertical outlet - 0,6 l/s	p. 305	175 €	232 €	232 €

* Please also state code AY or AX, refer to page 5 for order Information.

Accessories

PG	article no.	description	see	price
IN	B57-0370	Sealing System for rectangular shower trays	p. 356	110 €
IN	B57-0375	Sealing system onto wooden floor	p. 356	142 €
IN	B57-0407	Bath divider 3300 × 120 mm	p. 359	33 €
IN	Z0008669	Wall Brackets	p. 360	40 €
IN	B57-0404	Minimum Support Flex for shower trays 25 mm & shower areas	p. 347	57 €

Foot-System

→ p. 348

dimensions in mm	PG	article no.	price
900 × 600	IN	B50-3073	179 €
900 × 700	IN	B50-3024	179 €
900 × 750	IN	B50-3034	179 €
900 × 800	IN	B50-3043	179 €
900 × 850	IN	B50-3071	179 €
900 × 900	IN	B50-3051	179 €

Technical information and prices of additional BetteExtras on page 270. You will find the colours in the cover. Subject to alteration and production tolerance. Prices excluding VAT.

BetteUltra = 1000 mm

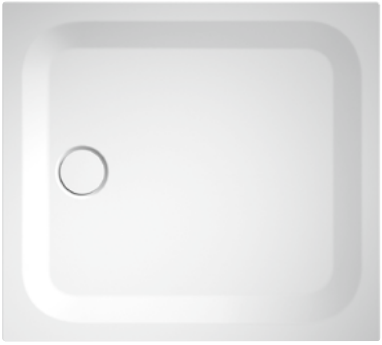

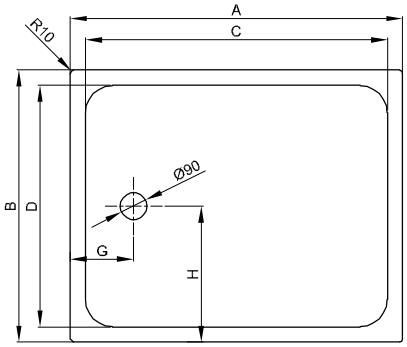

Shower trays ≥ 1000 mm

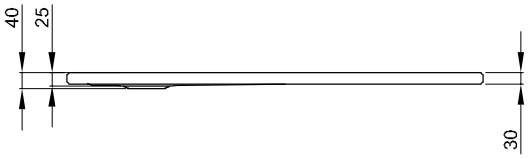

Shower trays < 1000 mm

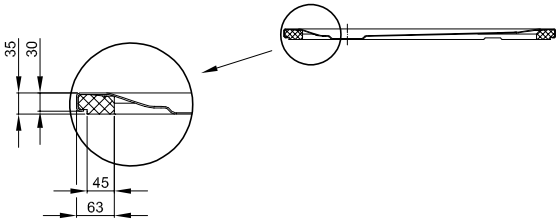

Illustration with pre-assembled Minimum support (T1).

Scope of delivery

Including noise-reducing pads.

Installation height

Waste fittings	from
B598-	123 mm
B597-	103 mm
B574-	120 mm
B594-	45 mm

Dimensions

article no.	dimensions in mm	A	B	C	D	G	H
5879	1000 × 700 × 25	1000	700	900	600	210	350
1650	1000 × 750 × 25	1000	750	900	650	210	375
5490	1000 × 800 × 25	1000	800	900	700	210	400
1660	1000 × 900 × 25	1000	900	900	800	210	450
5940	1000 × 1000 × 25	1000	1000	900	900	210	500

Subject to alteration and production tolerance.

Dimensions

Further dimensions on the following pages.

PG	article no.	dimensions in mm	weight (net)	pcs/pallet	White 000 → cover	coloured → cover
CO	5879	1000 × 700 × 25	16.5 kg	40	721 € ☗	816 €
CO	1650	1000 × 750 × 25	17.8 kg	40	721 € ☗	816 €
CO	5490	1000 × 800 × 25	19.3 kg	40	721 € ☗	816 €
CO	1660	1000 × 900 × 25	21.1 kg	40	721 € ☗	816 €
CO	5940	1000 × 1000 × 25	23.3 kg	40	721 € ☗	816 €

Extras

PG	code	description	see	price
EX	AE	BetteAnti-Slip Pro*[1]	p. 272	190 €
EX	AS	BetteAnti-Slip Sense*[1,2]	p. 273	190 €
EX	PLUS	BetteGlaze® Plus	p. 274	160 €
EX	T1	Minimum tray support (pre-assembled at factory) for shower trays and shower areas	p. 277	79 €
EX		BetteUpstand	p. 280	from 424 €
EX		Special size	p. 286	404 €
EX		Profi Corner	p. 284	from 404 €

*[1] Not available with Glaze® Plus.
*[2] Only available in combination with White (000).

Waste fittings

PG	article no.	description	see	Chrome 901	White and coloured → p. 310	White and coloured with Antislip Pro* | White 000 with Anti-Slip Sense*
IN	B598-	BetteSolid 50, side outlet - 0,6 l/s	p. 302	167 €	224 €	224 €
IN	B597-	BetteSolid 30, side outlet - 0,6 l/s	p. 303	167 €	224 €	224 €
IN	B574-	BetteScope, side outlet - 0,85 l/s	p. 304	174 €	231 €	231 €
IN	B594-	BetteDown, vertical outlet - 0,6 l/s	p. 305	175 €	232 €	232 €

* Please also state code AY or AX, refer to page 5 for order Information.

Accessories

PG	article no.	description	see	price
IN	B57-0370	Sealing System for rectangular shower trays	p. 356	110 €
IN	B57-0375	Sealing system onto wooden floor	p. 356	142 €
IN	B57-0371	Sealing System for Minimum Support	p. 356	110 €
IN	B57-0407	Bath divider 3300 × 120 mm	p. 359	33 €
IN	Z0008669	Wall Brackets	p. 360	40 €
IN	B57-0404	Minimum Support Flex for shower trays 25 mm & shower areas	p. 347	57 €

Foot-System

→ p. 348

dimensions in mm	PG	article no.	price
1000 × 700	IN	B50-3026	179 €
1000 × 750	IN	B50-3036	179 €
1000 × 800	IN	B50-3045	179 €
1000 × 900	IN	B50-3053	179 €
1000 × 1000	IN	B50-3064	179 €

Technical information and prices of additional BetteExtras on page 270. You will find the colours in the cover. Subject to alteration and production tolerance. Prices excluding VAT.

BetteUltra 1050 mm - 1100 mm

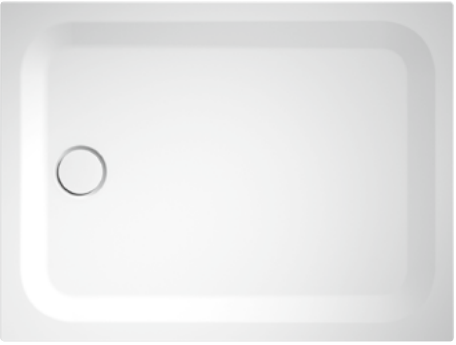

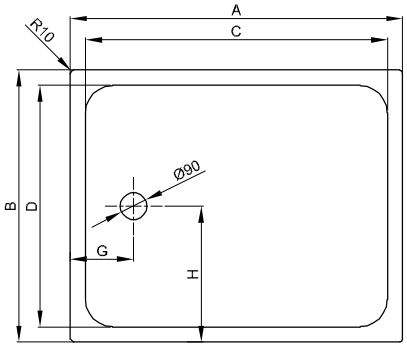

Shower trays ≥ 1000 mm

Illustration with pre-assembled Minimum support (T1).

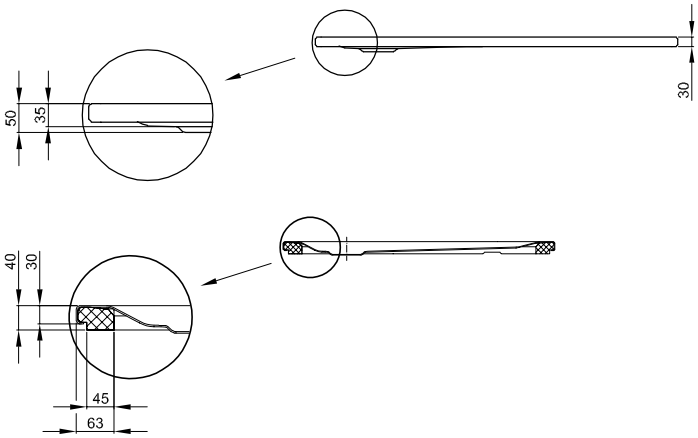

Illustration with pre-assembled Minimum support (T1).

Scope of delivery

Including noise-reducing pads.

Installation height

Waste fittings	from
B598-	123 mm
B597-	103 mm
B574-	120 mm
B594-	55 mm

Dimensions

article no.	dimensions in mm	A	B	C	D	G	H
8710	1050 × 750 × 35	1050	750	900	650	235	375
8725	1100 × 700 × 35	1100	700	1000	600	210	350
8727	1100 × 750 × 35	1100	750	1000	650	210	375
8729	1100 × 800 × 35	1100	800	920	700	260	400
8630	1100 × 900 × 35	1100	900	1000	800	210	450
8737	1100 × 1000 × 35	1100	1000	1000	900	210	500
8743	1100 × 1100 × 35	1100	1100	1000	1000	210	550

Subject to alteration and production tolerance.

Dimensions

Further dimensions on the following pages.

PG	article no.	dimensions in mm	weight (net)	pcs/pallet	White 000 → cover	coloured → cover
CO	8710	1050 × 750 × 35	18.7 kg	40	753 €	848 €
CO	8725	1100 × 700 × 35	18.1 kg	40	753 € ☗	848 €
CO	8727	1100 × 750 × 35	19.5 kg	40	753 € ☗	848 €
CO	8729	1100 × 800 × 35	20.5 kg	40	753 € ☗	848 €
CO	8630	1100 × 900 × 35	22.8 kg	40	753 € ☗	848 €
CO	8737	1100 × 1000 × 35	25.2 kg	40	753 € ☗	848 €
CO	8743	1100 × 1100 × 35	27.7 kg	40	753 € ☗	848 €

Extras

PG	code	description	see	price
EX	AE	BetteAnti-Slip Pro*[1]	p. 272	190 €
EX	AS	BetteAnti-Slip Sense*[1,2]	p. 273	190 €
EX	PLUS	BetteGlaze® Plus	p. 274	160 €
EX	T1	Minimum tray support (pre-assembled at factory) for shower trays and shower areas	p. 277	79 €
EX		BetteUpstand	p. 280	from 424 €
EX		Special size	p. 286	404 €
EX		Profi Corner	p. 284	from 404 €

*[1] Not available with Glaze® Plus.
*[2] Only available in combination with White (000).

Waste fittings

PG	article no.	description	see	Chrome 901	White and coloured → p. 310	White and coloured with Antislip Pro* | White 000 with Anti-Slip Sense*
IN	B598-	BetteSolid 50, side outlet - 0,6 l/s	p. 302	167 €	224 €	224 €
IN	B597-	BetteSolid 30, side outlet - 0,6 l/s	p. 303	167 €	224 €	224 €
IN	B574-	BetteScope, side outlet - 0,85 l/s	p. 304	174 €	231 €	231 €
IN	B594-	BetteDown, vertical outlet - 0,6 l/s	p. 305	175 €	232 €	232 €

* Please also state code AY or AX, refer to page 5 for order Information.

Accessories

PG	article no.	description	see	price
IN	B57-0370	Sealing System for rectangular shower trays	p. 356	110 €
IN	B57-0375	Sealing system onto wooden floor	p. 356	142 €
IN	B57-0371	Sealing System for Minimum Support	p. 356	110 €
IN	B57-0407	Bath divider 3300 × 120 mm	p. 359	33 €
IN	Z0008669	Wall Brackets	p. 360	40 €
IN	B57-0405	Minimum Support Flex for shower trays 35 mm	p. 347	57 €

Foot-System

→ p. 348

dimensions in mm	PG	article no.	price
1050 × 750	IN	B50-3037	179 €
1100 × 700	IN	B50-3025	179 €
1100 × 750	IN	B50-3027	179 €
1100 × 800	IN	B50-3047	179 €
1100 × 900	IN	B50-3055	179 €
1100 × 1000	IN	B50-3028	179 €
1100 × 1100	IN	B50-3029	179 €

Technical information and prices of additional BetteExtras on page 270. You will find the colours in the cover. Subject to alteration and production tolerance. Prices excluding VAT.

BetteUltra = 1200 mm

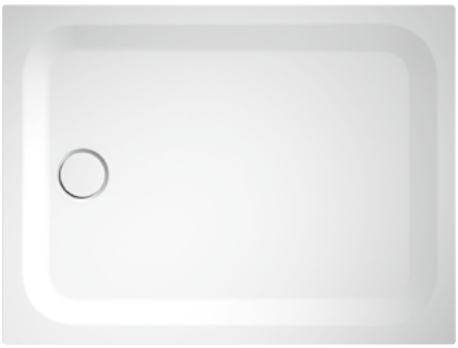

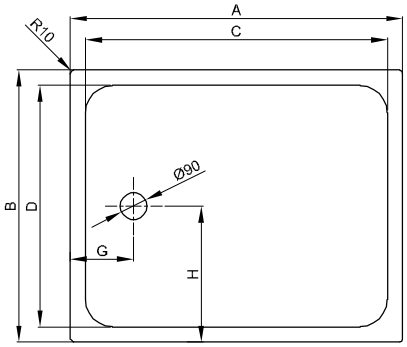

Shower trays ≥ 1000 mm

Illustration with pre-assembled Minimum support (T1).

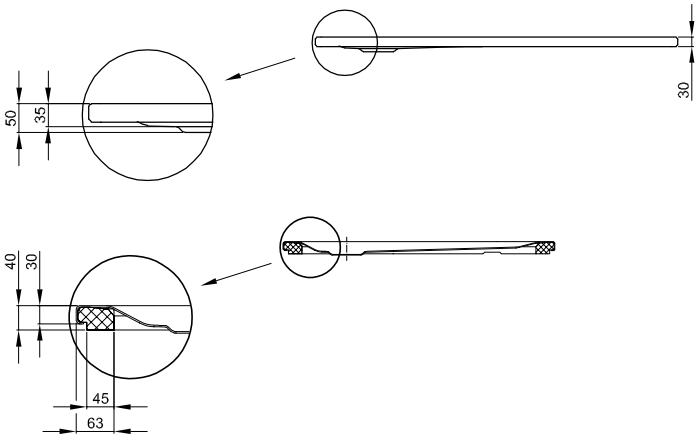

Illustration with pre-assembled Minimum support (T1).

Scope of delivery

Including noise-reducing pads.

Installation height

Waste fittings	from
B598-	123 mm
B597-	103 mm
B574-	120 mm
B594-	55 mm

Dimensions

article no.	dimensions in mm	A	B	C	D	G	H
5979	1200 × 700 × 35	1200	700	1100	600	210	350
1670	1200 × 750 × 35	1200	750	1100	650	210	375
1680	1200 × 800 × 35	1200	800	1100	700	210	400
1260	1200 × 900 × 35	1200	900	1100	800	210	450
8660	1200 × 1000 × 35	1200	1000	1100	900	210	500
8664	1200 × 1100 × 35	1200	1100	1100	1000	210	550
8720	1200 × 1200 × 35	1200	1200	1120	1120	210	600

Subject to alteration and production tolerance.

Dimensions

PG	article no.	dimensions in mm	weight (net)	pcs/pallet	White 000 → cover	coloured → cover
CO	5979	1200 × 700 × 35	20.3 kg	40	815 € ☗	910 €
CO	1670	1200 × 750 × 35	21 kg	40	815 € ☗	910 €
CO	1680	1200 × 800 × 35	22.2 kg	40	815 € ☗	910 €
CO	1260	1200 × 900 × 35	24.8 kg	40	815 € ☗	910 €
CO	8660	1200 × 1000 × 35	27.9 kg	14	815 € ☗	910 €
CO	8664	1200 × 1100 × 35	30 kg	14	883 € ☗	978 €
CO	8720	1200 × 1200 × 35	32.7 kg	14	883 € ☗	978 €

Extras

PG	code	description	see	price
EX	AE	BetteAnti-Slip Pro*[1]	p. 272	190 €
EX	AS	BetteAnti-Slip Sense*[1,2]	p. 273	190 €
EX	PLUS	BetteGlaze® Plus	p. 274	160 €
EX	T1	Minimum tray support (pre-assembled at factory) for shower trays and shower areas	p. 277	79 €
EX		BetteUpstand	p. 280	from 424 €
EX		Special size	p. 286	404 €
EX		Profi Corner	p. 284	from 404 €

*[1] Not available with Glaze® Plus.
*[2] Only available in combination with White (000).

Waste fittings

PG	article no.	description	see	Chrome 901	White and coloured → p. 310	White and coloured with Antislip Pro* | White 000 with Anti-Slip Sense*
IN	B598-	BetteSolid 50, side outlet - 0,6 l/s	p. 302	167 €	224 €	224 €
IN	B597-	BetteSolid 30, side outlet - 0,6 l/s	p. 303	167 €	224 €	224 €
IN	B574-	BetteScope, side outlet - 0,85 l/s	p. 304	174 €	231 €	231 €
IN	B594-	BetteDown, vertical outlet - 0,6 l/s	p. 305	175 €	232 €	232 €

* Please also state code AY or AX, refer to page 5 for order Information.

Accessories

PG	article no.	description	see	price
IN	B57-0370	Sealing System for rectangular shower trays	p. 356	110 €
IN	B57-0375	Sealing system onto wooden floor	p. 356	142 €
IN	B57-0371	Sealing System for Minimum Support	p. 356	110 €
IN	B57-0407	Bath divider 3300 × 120 mm	p. 359	33 €
IN	Z0008669	Wall Brackets	p. 360	40 €
IN	B57-0405	Minimum Support Flex for shower trays 35 mm	p. 347	57 €

Foot-System

→ p. 348

dimensions in mm	PG	article no.	price
1200 × 700	IN	B50-3030	205 €
1200 × 750	IN	B50-3040	205 €
1200 × 800	IN	B50-3049	205 €
1200 × 900	IN	B50-3057	205 €
1200 × 1000	IN	B50-3074	205 €
1200 × 1100	IN	B50-3035	205 €
1200 × 1200	IN	B50-3065	205 €

Technical information and prices of additional BetteExtras on page 270. You will find the colours in the cover. Subject to alteration and production tolerance. Prices excluding VAT.

BetteUltra 1300 mm - 1400 mm

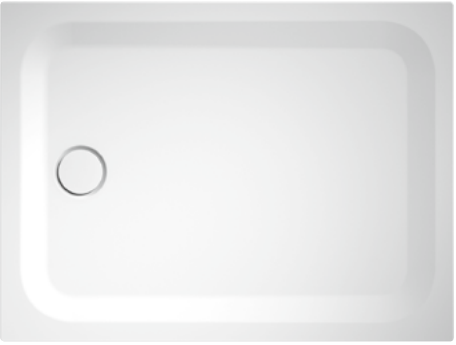

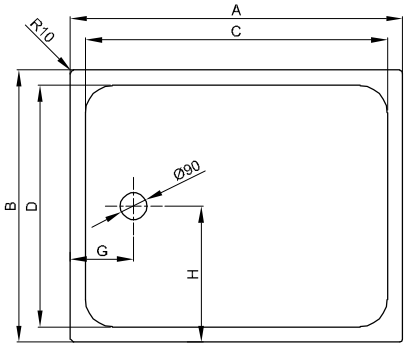

Shower trays ≥ 1000 mm

Illustration with pre-assembled Minimum support (T1).

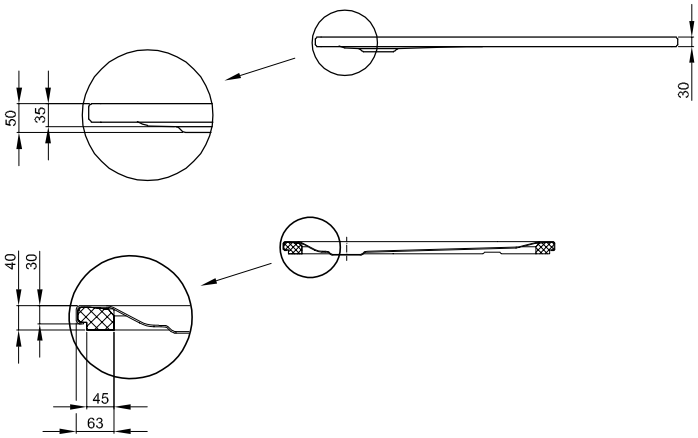

Illustration with pre-assembled Minimum support (T1).

Scope of delivery

Including noise-reducing pads.

Installation height

Waste fittings	from
B598-	123 mm
B597-	103 mm
B574-	120 mm
B594-	55 mm

Dimensions

article no.	dimensions in mm	A	B	C	D	G	H
5784	1300 × 700 × 35	1300	700	1200	600	210	350
5785	1300 × 750 × 35	1300	750	1200	600	210	375
5786	1300 × 800 × 35	1300	800	1200	700	210	400
5795	1300 × 900 × 35	1300	900	1200	800	210	450
5788	1300 × 1000 × 35	1300	1000	1200	900	210	500
5826	1300 × 1300 × 35	1300	1300	1200	1200	210	650
5824	1400 × 700 × 35	1400	700	1300	600	210	350
5814	1400 × 750 × 35	1400	750	1300	600	210	375
5804	1400 × 800 × 35	1400	800	1300	700	210	400
5834	1400 × 900 × 35	1400	900	1300	800	210	450
5838	1400 × 1000 × 35	1400	1000	1300	900	210	500
5828	1400 × 1400 × 35	1400	1400	1300	1300	210	700

Subject to alteration and production tolerance.

Dimensions

Further dimensions on the following pages.

PG	article no.	dimensions in mm	weight (net)	pcs/pallet	White 000 → cover	coloured → cover
CO	5784	1300 × 700 × 35	20.5 kg	14	883 €	978 €
CO	5785	1300 × 750 × 35	21.8 kg	14	883 €	978 €
CO	5786	1300 × 800 × 35	24 kg	14	883 € ☗	978 €
CO	5795	1300 × 900 × 35	26.7 kg	14	883 € ☗	978 €
CO	5788	1300 × 1000 × 35	30.3 kg	14	883 € ☗	978 €
CO	5826	1300 × 1300 × 35	36.8 kg	14	951 €	1.046 €
CO	5824	1400 × 700 × 35	23.2 kg	14	883 € ☗	978 €
CO	5814	1400 × 750 × 35	23.3 kg	14	883 € ☗	978 €
CO	5804	1400 × 800 × 35	25.9 kg	14	883 € ☗	978 €
CO	5834	1400 × 900 × 35	28.5 kg	14	883 € ☗	978 €
CO	5838	1400 × 1000 × 35	32.2 kg	14	883 € ☗	978 €
CO	5828	1400 × 1400 × 35	42.3 kg	14	1.019 €	1.114 €

Extras

PG	code	description	see	price
EX	AE	BetteAnti-Slip Pro*[1]	p. 272	190 €
EX	AS	BetteAnti-Slip Sense*[1,2]	p. 273	190 €
EX	PLUS	BetteGlaze® Plus	p. 274	160 €
EX	T1	Minimum tray support (pre-assembled at factory) for shower trays and shower areas	p. 277	79 €
EX		BetteUpstand	p. 280	from 424 €
EX		Special size	p. 286	404 €
EX		Profi Corner	p. 284	from 404 €

*[1] Not available with Glaze® Plus.
*[2] Only available in combination with White (000).

Waste fittings

PG	article no.	description	see	Chrome 901	White and coloured → p. 310	White and coloured with Antislip Pro* | White 000 with Anti-Slip Sense*
IN	B598-	BetteSolid 50, side outlet - 0,6 l/s	p. 302	167 €	224 €	224 €
IN	B597-	BetteSolid 30, side outlet - 0,6 l/s	p. 303	167 €	224 €	224 €
IN	B574-	BetteScope, side outlet - 0,85 l/s	p. 304	174 €	231 €	231 €
IN	B594-	BetteDown, vertical outlet - 0,6 l/s	p. 305	175 €	232 €	232 €

* Please also state code AY or AX, refer to page 5 for order Information.

Accessories

PG	article no.	description	see	price
IN	B57-0370	Sealing System for rectangular shower trays	p. 356	110 €
IN	B57-0375	Sealing system onto wooden floor	p. 356	142 €
IN	B57-0371	Sealing System for Minimum Support	p. 356	110 €
IN	B57-0407	Bath divider 3300 × 120 mm	p. 359	33 €
IN	Z0008669	Wall Brackets	p. 360	40 €
IN	B57-0405	Minimum Support Flex for shower trays 35 mm	p. 347	57 €

Foot-System

→ p. 348

dimensions in mm	PG	article no.	price
1300 × 700	IN	B50-3056	205 €
1300 × 750	IN	B50-3054	205 €
1300 × 800	IN	B50-3060	205 €
1300 × 900	IN	B50-3038	205 €
1300 × 1000	IN	B50-3061	205 €
1300 × 1300	IN	B50-3092	224 €
1400 × 700	IN	B50-3058	224 €
1400 × 750	IN	B50-3059	224 €
1400 × 800	IN	B50-3050	224 €
1400 × 900	IN	B50-3062	224 €
1400 × 1000	IN	B50-3039	224 €
1400 × 1400	IN	B50-3093	252 €

Technical information and prices of additional BetteExtras on page 270. You will find the colours in the cover. Subject to alteration and production tolerance. Prices excluding VAT.

BetteUltra = 1500 mm

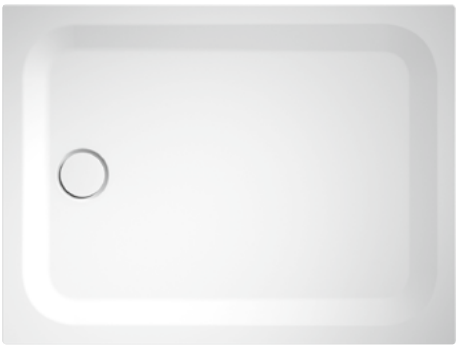

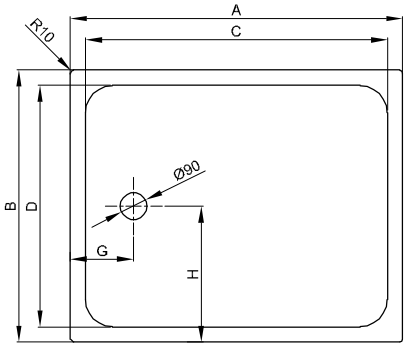

Shower trays ≥ 1000 mm

Illustration with pre-assembled Minimum support (T1).

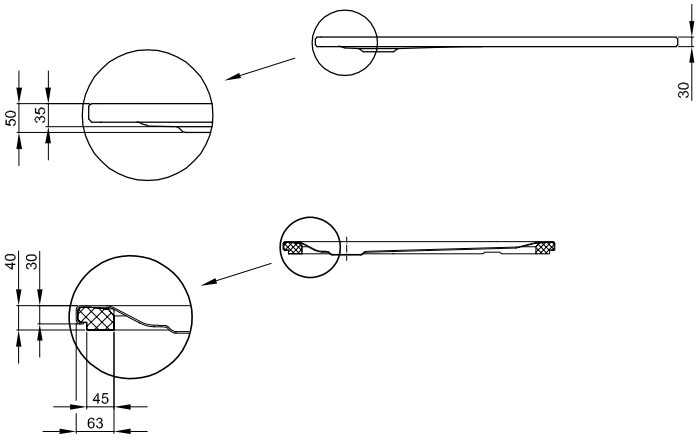

Illustration with pre-assembled Minimum support (T1).

Scope of delivery

Including noise-reducing pads.

Installation height

Waste fittings	from
B598-	123 mm
B597-	103 mm
B574-	120 mm
B594-	55 mm

Dimensions

article no.	dimensions in mm	A	B	C	D	G	H
5914	1500 × 700 × 35	1500	700	1400	600	210	350
5924	1500 × 750 × 35	1500	750	1400	600	210	375
5932	1500 × 800 × 35	1500	800	1400	700	210	400
5934	1500 × 900 × 35	1500	900	1400	800	210	450
5944	1500 × 1000 × 35	1500	1000	1400	900	210	500
5984	1500 × 1500 × 35	1500	1500	1400	1400	210	750

Subject to alteration and production tolerance.

Dimensions

Further dimensions on the following pages.

PG	article no.	dimensions in mm	weight (net)	pcs/pallet	White 000 → cover	coloured → cover
CO	5914	1500 × 700 × 35	24.6 kg	14	917 €	1.012 €
CO	5924	1500 × 750 × 35	26.1 kg	14	917 € ☗	1.012 €
CO	5932	1500 × 800 × 35	27.3 kg	14	917 € ☗	1.012 €
CO	5934	1500 × 900 × 35	30.9 kg	14	917 € ☗	1.012 €
CO	5944	1500 × 1000 × 35	34.2 kg	14	917 € ☗	1.012 €
CO	5984	1500 × 1500 × 35	53 kg	5	1.087 €	1.182 €

Extras

PG	code	description	see	price
EX	AE	BetteAnti-Slip Pro*[1]	p. 272	190 €
EX	AS	BetteAnti-Slip Sense*[1,2]	p. 273	190 €
EX	PLUS	BetteGlaze® Plus	p. 274	160 €
EX	T1	Minimum tray support (pre-assembled at factory) for shower trays and shower areas	p. 277	79 €
EX		BetteUpstand	p. 280	from 424 €
EX		Special size	p. 286	404 €
EX		Profi Corner	p. 284	from 404 €

*[1] Not available with Glaze® Plus.
*[2] Only available in combination with White (000).

Waste fittings

PG	article no.	description	see	Chrome 901	White and coloured → p. 310	White and coloured with Antislip Pro* | White 000 with Anti-Slip Sense*
IN	B598-	BetteSolid 50, side outlet - 0,6 l/s	p. 302	167 €	224 €	224 €
IN	B597-	BetteSolid 30, side outlet - 0,6 l/s	p. 303	167 €	224 €	224 €
IN	B574-	BetteScope, side outlet - 0,85 l/s	p. 304	174 €	231 €	231 €
IN	B594-	BetteDown, vertical outlet - 0,6 l/s	p. 305	175 €	232 €	232 €

* Please also state code AY or AX, refer to page 5 for order Information.

Accessories

PG	article no.	description	see	price
IN	B57-0370	Sealing System for rectangular shower trays	p. 356	110 €
IN	B57-0375	Sealing system onto wooden floor	p. 356	142 €
IN	B57-0371	Sealing System for Minimum Support	p. 356	110 €
IN	B57-0407	Bath divider 3300 × 120 mm	p. 359	33 €
IN	Z0008669	Wall Brackets	p. 360	40 €
IN	B57-0405	Minimum Support Flex for shower trays 35 mm	p. 347	57 €

Foot-System

→ p. 348

dimensions in mm	PG	article no.	price
1500 × 700	IN	B50-3075	224 €
1500 × 750	IN	B50-3076	224 €
1500 × 800	IN	B50-3079	224 €
1500 × 900	IN	B50-3077	224 €
1500 × 1000	IN	B50-3078	224 €
1500 × 1500	IN	B50-3080	252 €

Technical information and prices of additional BetteExtras on page 270. You will find the colours in the cover. Subject to alteration and production tolerance. Prices excluding VAT.

BetteUltra 1600 mm - 2000 mm

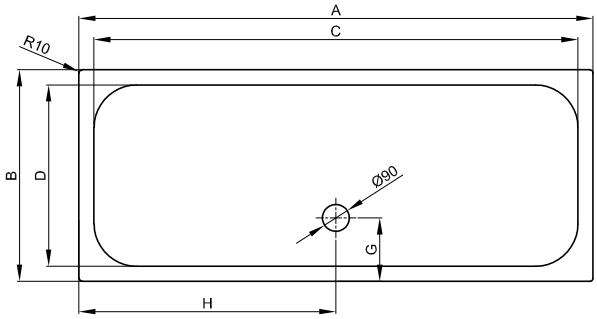

shower trays with dimension ≥ 1600 mm are delivered with waste positioned in centre of long shank.

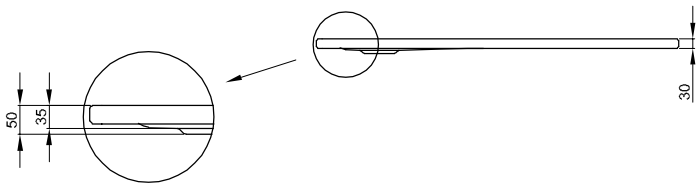

Scope of delivery

Including noise-reducing pads.

Installation height

Waste fittings	from
B598-	123 mm
B597-	103 mm
B574-	120 mm
B594-	55 mm

Dimensions

article no.	dimensions in mm	A	B	C	D	G	H
5951	1600 × 700 × 35	1600	700	1500	600	210	800
5953	1600 × 750 × 35	1600	750	1500	650	210	800
5955	1600 × 800 × 35	1600	800	1500	700	210	800
5961	1600 × 900 × 35	1600	900	1500	800	210	800
5967	1600 × 1000 × 35	1600	1000	1500	900	210	800
5992	1700 × 700 × 35	1700	700	1600	600	210	850
5996	1700 × 750 × 35	1700	750	1600	700	210	850
5971	1700 × 800 × 35	1700	800	1600	700	210	850
5998	1700 × 900 × 35	1700	900	1600	800	210	850
5806	1700 × 1000 × 35	1700	1000	1600	900	210	850
5986	1800 × 800 × 35	1800	800	1700	700	210	900
5982	1800 × 900 × 35	1800	900	1700	800	210	900
5808	1800 × 1000 × 35	1800	1000	1700	900	210	900
5973	1900 × 900 × 35	1900	900	1800	800	210	950
5974	2000 × 900 × 35	2000	900	1900	800	210	1000

Subject to alteration and production tolerance.

Dimensions

PG	article no.	dimensions in mm	weight (net)	pcs/pallet	White 000 → cover	coloured → cover
CO	5951	1600 × 700 × 35	26 kg	14	917 € ☗	1.012 €
CO	5953	1600 × 750 × 35	27.8 kg	14	917 € ☗	1.012 €
CO	5955	1600 × 800 × 35	29.3 kg	14	917 € ☗	1.012 €
CO	5961	1600 × 900 × 35	33.1 kg	14	917 € ☗	1.012 €
CO	5967	1600 × 1000 × 35	35.9 kg	14	988 € ☗	1.083 €
CO	5992	1700 × 700 × 35	27.8 kg	14	951 € ☗	1.046 €
CO	5996	1700 × 750 × 35	29.3 kg	14	951 € ☗	1.046 €
CO	5971	1700 × 800 × 35	30.05 kg	14	951 € ☗	1.046 €
CO	5998	1700 × 900 × 35	34.5 kg	14	951 € ☗	1.046 €
CO	5806	1700 × 1000 × 35	39.5 kg	14	988 €	1.083 €
CO	5986	1800 × 800 × 35	33.2 kg	14	988 € ☗	1.083 €
CO	5982	1800 × 900 × 35	36.4 kg	14	988 € ☗	1.083 €
CO	5808	1800 × 1000 × 35	40 kg	14	988 € ☗	1.083 €
CO	5973	1900 × 900 × 35	38 kg	14	1.061 €	1.156 €
CO	5974	2000 × 900 × 35	40 kg	14	1.061 €	1.156 €

Extras

PG	code	description	see	price
EX	AE	BetteAnti-Slip Pro*[1]	p. 272	190 €
EX	AS	BetteAnti-Slip Sense*[1,2]	p. 273	190 €
EX	PLUS	BetteGlaze® Plus	p. 274	160 €
EX	T1	Minimum tray support (pre-assembled at factory) for shower trays and shower areas	p. 277	79 €
EX		BetteUpstand	p. 280	from 424 €
EX		Special size	p. 286	404 €
EX		Profi Corner	p. 284	from 404 €

*[1] Not available with Glaze® Plus.
*[2] Only available in combination with White (000).

Waste fittings

PG	article no.	description	see	Chrome 901	White and coloured → p. 310	White and coloured with Antislip Pro* | White 000 with Anti-Slip Sense*
IN	B598-	BetteSolid 50, side outlet - 0,6 l/s	p. 302	167 €	224 €	224 €
IN	B597-	BetteSolid 30, side outlet - 0,6 l/s	p. 303	167 €	224 €	224 €
IN	B574-	BetteScope, side outlet - 0,85 l/s	p. 304	174 €	231 €	231 €
IN	B594-	BetteDown, vertical outlet - 0,6 l/s	p. 305	175 €	232 €	232 €

* Please also state code AY or AX, refer to page 5 for order Information.

Accessories

PG	article no.	description	see	price
IN	B57-0370	Sealing System for rectangular shower trays	p. 356	110 €
IN	B57-0375	Sealing system onto wooden floor	p. 356	142 €
IN	B57-0371	Sealing System for Minimum Support	p. 356	110 €
IN	B57-0407	Bath divider 3300 × 120 mm	p. 359	33 €
IN	Z0008669	Wall Brackets	p. 360	40 €
IN	B57-0405	Minimum Support Flex for shower trays 35 mm	p. 347	57 €

Foot-System

→ p. 348

dimensions in mm	PG	article no.	price
1600 × 700	IN	B50-3042	252 €
1600 × 750	IN	B50-3044	252 €
1600 × 800	IN	B50-3066	252 €
1600 × 900	IN	B50-3046	252 €
1600 × 1000	IN	B50-3068	252 €
1700 × 700	IN	B50-3081	252 €
1700 × 750	IN	B50-3082	252 €
1700 × 800	IN	B50-3063	252 €
1700 × 900	IN	B50-3048	252 €
1700 × 1000	IN	B50-3089	252 €
1800 × 800	IN	B50-3069	252 €
1800 × 900	IN	B50-3052	252 €
1800 × 1000	IN	B50-3091	252 €
1900 × 900	IN	B50-3096	252 €
2000 × 900	IN	B50-3097	252 €

Technical information and prices of additional BetteExtras on page 270. You will find the colours in the cover. Subject to alteration and production tolerance. Prices excluding VAT.

BetteUltra with polystyrene support

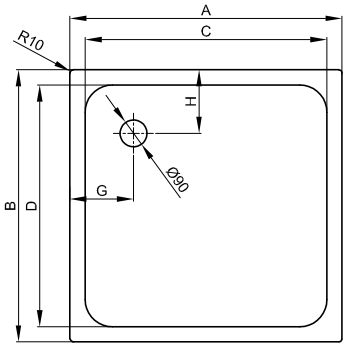

Shower trays < 1000 mm

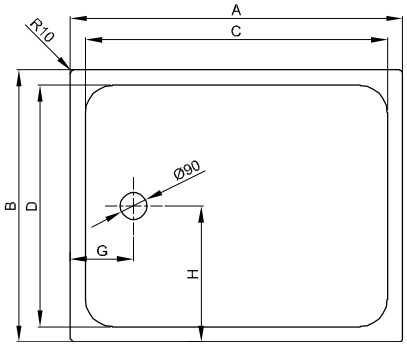

Shower trays ≥ 1000 mm

Information

The dimensions 1400 × 800 mm, 1400 × 900 mm and 1500 × 900 mm are not available with BetteUpstand.

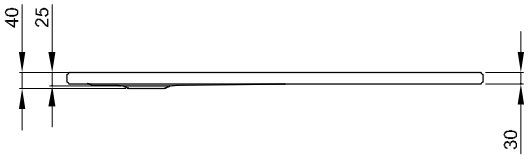

Shower trays < 1000 mm

Scope of delivery

Shower tray with pre-assembled supporting elements in expanded polystyrene (EPS)

Including noise-reducing pads.

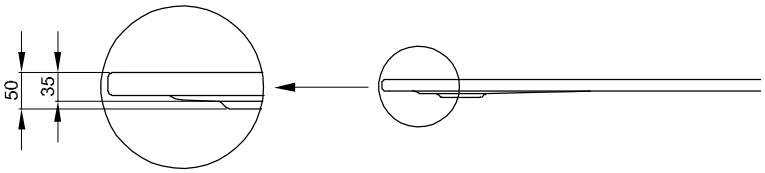

Shower trays > 1000 mm

Installation height

Waste fittings	from
B598-	130 mm
B597-	130 mm
B574-	130 mm
B594-	55 mm

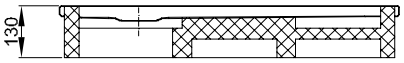

with polystyrene shower tray support

Dimensions

article no.	dimensions in mm	A	B	C	D	G	H
5830 T	800 × 800 × 25	800	800	700	700	210	210
5709 T	900 × 700 × 25	900	700	800	600	210	210
5840 T	900 × 750 × 25	900	750	800	650	210	210
8750 T	900 × 800 × 25	900	800	800	700	210	210
5930 T	900 × 900 × 25	900	900	800	800	210	210
5879 T	1000 × 700 × 25	1000	700	900	600	210	350
1650 T	1000 × 750 × 25	1000	750	900	650	210	375
5490 T	1000 × 800 × 25	1000	800	900	700	210	400
5940 T	1000 × 1000 × 25	1000	1000	900	900	210	500
8729 T	1100 × 800 × 35	1100	800	920	700	260	400
8630 T	1100 × 900 × 35	1100	900	1000	800	210	450
1670 T	1200 × 750 × 35	1200	750	1100	650	210	375
1680 T	1200 × 800 × 35	1200	800	1100	700	210	400
1260 T	1200 × 900 × 35	1200	900	1100	800	210	450
8660 T	1200 × 1000 × 35	1200	1000	1100	900	210	500
5804 T	1400 × 800 × 35	1400	800	1300	700	210	400
5834 T	1400 × 900 × 35	1400	900	1300	800	210	450
5934 T	1500 × 900 × 35	1500	900	1400	800	210	450

Subject to alteration and production tolerance.

Dimensions

PG	article no.	dimensions in mm	weight (net)	pcs/pallet	White 000 → cover	coloured → cover
CO	5830 T	800 × 800 × 25	16.3 kg	13	723 €	818 €
CO	5709 T	900 × 700 × 25	15.9 kg	13	723 €	818 €
CO	5840 T	900 × 750 × 25	17 kg	13	723 €	818 €
CO	8750 T	900 × 800 × 25	17.8 kg	13	723 €	818 €
CO	5930 T	900 × 900 × 25	19.8 kg	13	723 €	818 €
CO	5879 T	1000 × 700 × 25	17.5 kg	13	817 €	912 €
CO	1650 T	1000 × 750 × 25	18.8 kg	13	817 €	912 €
CO	5490 T	1000 × 800 × 25	20.3 kg	13	817 €	912 €
CO	5940 T	1000 × 1000 × 25	24.3 kg	13	817 €	912 €
CO	8729 T	1100 × 800 × 35	21.5 kg	13	849 €	944 €
CO	8630 T	1100 × 900 × 35	23.8 kg	13	849 €	944 €
CO	1670 T	1200 × 750 × 35	22 kg	13	911 €	1.006 €
CO	1680 T	1200 × 800 × 35	23.2 kg	13	911 €	1.006 €
CO	1260 T	1200 × 900 × 35	25.8 kg	13	911 €	1.006 €
CO	8660 T	1200 × 1000 × 35	28.9 kg	13	911 €	1.006 €
CO	5804 T	1400 × 800 × 35	26.9 kg	13	979 €	1.074 €
CO	5834 T	1400 × 900 × 35	29.5 kg	13	979 €	1.074 €
CO	5934 T	1500 × 900 × 35	31.9 kg	13	1.013 €	1.108 €

Please note the ordering information on page 5.

Extras

PG	code	description	see	price
EX	AE	BetteAnti-Slip Pro*[1]	p. 272	190 €
EX	AS	BetteAnti-Slip Sense*[1,2]	p. 273	190 €
EX	PLUS	BetteGlaze® Plus	p. 274	160 €
EX		BetteUpstand	p. 280	from 424 €

*[1] Not available with Glaze® Plus.
*[2] Only available in combination with White (000).

Waste fittings

PG	article no.	description	see	Chrome 901	White and coloured → p. 310	White and coloured with Antislip Pro* | White 000 with Anti-Slip Sense*
IN	B598-	BetteSolid 50, side outlet - 0,6 l/s	p. 302	167 €	224 €	224 €
IN	B597-	BetteSolid 30, side outlet - 0,6 l/s	p. 303	167 €	224 €	224 €
IN	B574-	BetteScope, side outlet - 0,85 l/s	p. 304	174 €	231 €	231 €
IN	B594-	BetteDown, vertical outlet - 0,6 l/s	p. 305	175 €	232 €	232 €

* Please also state code AY or AX, refer to page 5 for order Information.

Technical information and prices of additional BetteExtras on page 270. You will find the colours in the cover. Subject to alteration and production tolerance. Prices excluding VAT.

Washbasins

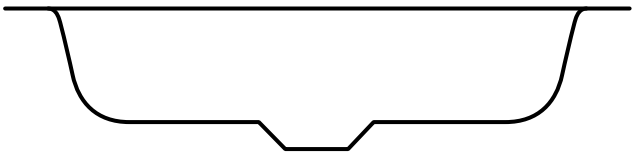

234 BetteAqua Built-In
236 BetteArt Counter Top
238 BetteArt Monolith
240 BetteComodo Built-In
242 BetteComodo Undermounted
244 BetteComodo Undermounted with overflow
246 BetteCraft Shell
248 BetteLoft Built-In
254 BetteLoft Ornament Wall Mounted, 1 row
256 BetteLoft Ornament Wall Mounted, 4 rows
250 BetteLoft Undermounted
252 BetteLoft Undermounted with overflow
258 BetteLux Built-In
262 BetteLux Oval Built-In
264 BetteLux Oval Couture
260 BetteLux Shape
266 BetteOne Built-In
268 BetteOne Undermounted

BetteAqua Built-In

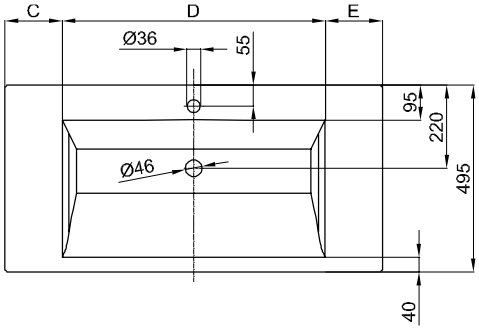

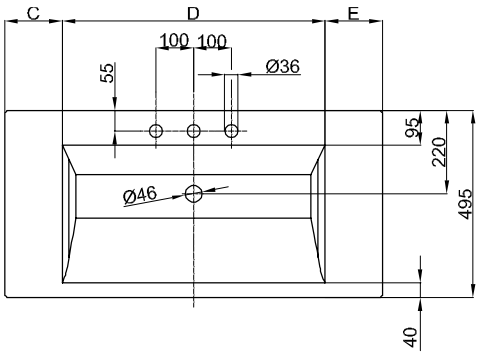

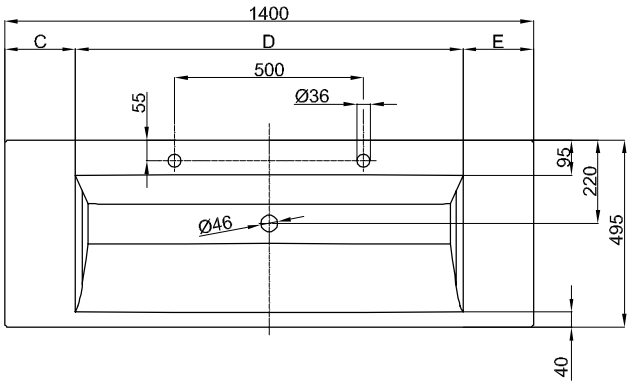

BetteAqua 1400 × 495 mm with 2 tapholes

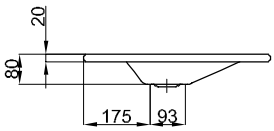

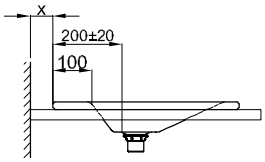

Recommended taps:

spout projection: distance to wall x mm + ca. 200 mm from outer edge

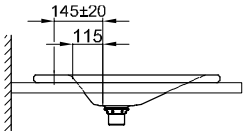

Recommended taps:

spout projection: ca. 145 mm from centre of taphole

Download note

Template for cutout can be downloaded at www.my-bette.com

Scope of delivery

Including fixing materials

Including noise-reducing pads.

Design: schmiddem design

Dimensions

article no.	dimensions in mm	Tapholes	C	D	E
A070	600 × 495 × 80		80	440	80
A070 HLW1	600 × 495 × 80	o	80	440	80
A071	800 × 495 × 80		135	530	135
A071 HLW1	800 × 495 × 80	o	135	530	135
A072	1400 × 495 × 80		185	1030	185
A072 HLW1	1400 × 495 × 80	o	185	1030	185
A072 HLW2	1400 × 495 × 80	o o	185	1030	185

Subject to alteration and production tolerance.

Dimensions

PG	article no.	dimensions in mm	Tapholes	weight (net)	White 000 → cover	coloured → cover
CO	A070	600 × 495 × 80		6.5 kg	480 €	597 €
CO	A070 HLW1	600 × 495 × 80	o	6.5 kg	480 €	597 €
CO	A071	800 × 495 × 80		8 kg	502 €	619 €
CO	A071 HLW1	800 × 495 × 80	o	8 kg	502 €	619 €
CO	A072	1400 × 495 × 80		14 kg	769 €	886 €
CO	A072 HLW1	1400 × 495 × 80	o	14 kg	769 €	886 €
CO	A072 HLW2	1400 × 495 × 80	o o	14 kg	769 €	886 €

Please note the ordering information on page 5.

Extras

PG	code	description	see	price
EX	PW	BetteGlaze® Plus for washbasin	p. 274	66 €
EX	HLZ	Tapholes and drilling as per special drawing	p. 276	234 €
EX	HLW3	Drilling for 3-hole-tap	p. 276	96 €

Accessories

PG	article no.	description	see	price
IN	B580-901	Unslotted Waste 1¼ ", chrome	p. 362	74 €
IN	B580-000	Unslotted Waste 1¼ ", enamelled, White	p. 362	120 €
IN	B580-001	Unslotted Waste 1¼ ", enamelled, Pergamon	p. 362	120 €
IN	B580-002	Unslotted Waste 1¼ ", enamelled, Manhatten	p. 362	120 €
IN	B580-003	Unslotted Waste 1¼ ", enamelled, Bahama beige	p. 362	120 €
IN	B580-004	Unslotted Waste 1¼ ", enamelled, Edelweiss	p. 362	120 €
IN	B580-006	Unslotted Waste 1¼ ", enamelled, Jasmin	p. 362	120 €
IN	B580-035	Unslotted Waste 1¼ ", enamelled, Ebony	p. 362	120 €
IN	B580-056	Unslotted Waste 1¼ ", enamelled, Black	p. 362	120 €
IN	B580-400	Unslotted Waste 1¼ ", enamelled, Raven	p. 362	120 €
IN	B580-401	Unslotted Waste 1¼ ", enamelled, Anthracite	p. 362	120 €
IN	B580-402	Unslotted Waste 1¼ ", enamelled, Slate	p. 362	120 €
IN	B580-403	Unslotted Waste 1¼ ", enamelled, Smoke	p. 362	120 €
IN	B580-404	Unslotted Waste 1¼ ", enamelled, Graphite	p. 362	120 €
IN	B580-410	Unslotted Waste 1¼ ", enamelled, Silver	p. 362	120 €
IN	B580-412	Unslotted Waste 1¼ ", enamelled, Quartz	p. 362	120 €
IN	B580-413	Unslotted Waste 1¼ ", enamelled, Dust	p. 362	120 €
IN	B580-414	Unslotted Waste 1¼ ", enamelled, Flint	p. 362	120 €
IN	B580-415	Unslotted Waste 1¼ ", enamelled, Cashmere	p. 362	120 €
IN	B580-416	Unslotted Waste 1¼ ", enamelled, Stone	p. 362	120 €
IN	B580-417	Unslotted Waste 1¼ ", enamelled, Hazel	p. 362	120 €
IN	B580-422	Unslotted Waste 1¼ ", enamelled, Beige	p. 362	120 €
IN	B580-423	Unslotted Waste 1¼ ", enamelled, Flax	p. 362	120 €
IN	B580-424	Unslotted Waste 1¼ ", enamelled, Sand	p. 362	120 €
IN	B580-425	Unslotted Waste 1¼ ", enamelled, Greige	p. 362	120 €
IN	B580-430	Unslotted Waste 1¼ ", enamelled, Coffee	p. 362	120 €
IN	B580-434	Unslotted Waste 1¼ ", enamelled, Ebano	p. 362	120 €
IN	B580-438	Unslotted Waste 1¼ ", enamelled, Taupe	p. 362	120 €
IN	B580-439	Unslotted Waste 1¼ ", enamelled, Cacao	p. 362	120 €
IN	B580-440	Unslotted Waste 1¼ ", enamelled, Snow	p. 362	120 €
IN	B580-441	Unslotted Waste 1¼ ", enamelled, Cream	p. 362	120 €
IN	B580-418	Unslotted Waste 1¼ ", enamelled, Blue Satin	p. 362	120 €
IN	B580-790	Unslotted Waste 1¼ ", enamelled, Midnight	p. 362	120 €
IN	B580-788	Unslotted Waste 1¼ ", enamelled, Daylight	p. 362	120 €
IN	B580-791	Unslotted Waste 1¼ ", enamelled, Forest	p. 362	120 €

Technical information and prices of additional BetteExtras on page 270. You will find the colours in the cover. Subject to alteration and production tolerance. Prices excluding VAT.

BetteArt Counter Top

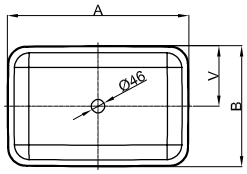

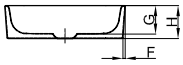

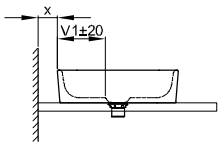

Recommended taps:

spout projection: distance to wall x mm + dimension V1 from outer edge

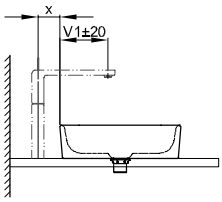

Recommended taps:

spout projection: distance tap x mm + dimension V1 from outer edge

Scope of delivery

Including fixing materials

Including noise-reducing pads.

Design: Tesseraux + Partner

Dimensions

article no.	dimensions in mm	A	B	F	G	H	V	V1
A180	300 × 400 × 80	400	300	6	80	90	150	105
A181	600 × 400 × 100	600	400	8	100	110	200	155
A182	800 × 400 × 100	800	400	8	100	110	200	155

Subject to alteration and production tolerance.

Dimensions

PG	article no.	dimensions in mm	weight (net)	White 000 → cover	coloured → cover
CO	A180	300 × 400 × 80	4.9 kg	1.067 €	1.184 €
CO	A181	600 × 400 × 100	8.7 kg	1.173 €	1.290 €
CO	A182	800 × 400 × 100	11 kg	1.227 €	1.344 €

Extras

PG	code	description	see	price
EX	PW	BetteGlaze® Plus for washbasin	p. 274	66 €

Accessories

PG	article no.	description	see	price
IN	B580-901	Unslotted Waste 1¼ ", chrome	p. 362	74 €
IN	B580-000	Unslotted Waste 1¼ ", enamelled, White	p. 362	120 €
IN	B580-001	Unslotted Waste 1¼ ", enamelled, Pergamon	p. 362	120 €
IN	B580-002	Unslotted Waste 1¼ ", enamelled, Manhatten	p. 362	120 €
IN	B580-003	Unslotted Waste 1¼ ", enamelled, Bahama beige	p. 362	120 €
IN	B580-004	Unslotted Waste 1¼ ", enamelled, Edelweiss	p. 362	120 €
IN	B580-006	Unslotted Waste 1¼ ", enamelled, Jasmin	p. 362	120 €
IN	B580-035	Unslotted Waste 1¼ ", enamelled, Ebony	p. 362	120 €
IN	B580-056	Unslotted Waste 1¼ ", enamelled, Black	p. 362	120 €
IN	B580-400	Unslotted Waste 1¼ ", enamelled, Raven	p. 362	120 €
IN	B580-401	Unslotted Waste 1¼ ", enamelled, Anthracite	p. 362	120 €
IN	B580-402	Unslotted Waste 1¼ ", enamelled, Slate	p. 362	120 €
IN	B580-403	Unslotted Waste 1¼ ", enamelled, Smoke	p. 362	120 €
IN	B580-404	Unslotted Waste 1¼ ", enamelled, Graphite	p. 362	120 €
IN	B580-410	Unslotted Waste 1¼ ", enamelled, Silver	p. 362	120 €
IN	B580-412	Unslotted Waste 1¼ ", enamelled, Quartz	p. 362	120 €
IN	B580-413	Unslotted Waste 1¼ ", enamelled, Dust	p. 362	120 €
IN	B580-414	Unslotted Waste 1¼ ", enamelled, Flint	p. 362	120 €
IN	B580-415	Unslotted Waste 1¼ ", enamelled, Cashmere	p. 362	120 €
IN	B580-416	Unslotted Waste 1¼ ", enamelled, Stone	p. 362	120 €
IN	B580-417	Unslotted Waste 1¼ ", enamelled, Hazel	p. 362	120 €
IN	B580-422	Unslotted Waste 1¼ ", enamelled, Beige	p. 362	120 €
IN	B580-423	Unslotted Waste 1¼ ", enamelled, Flax	p. 362	120 €
IN	B580-424	Unslotted Waste 1¼ ", enamelled, Sand	p. 362	120 €
IN	B580-425	Unslotted Waste 1¼ ", enamelled, Greige	p. 362	120 €
IN	B580-430	Unslotted Waste 1¼ ", enamelled, Coffee	p. 362	120 €
IN	B580-434	Unslotted Waste 1¼ ", enamelled, Ebano	p. 362	120 €
IN	B580-438	Unslotted Waste 1¼ ", enamelled, Taupe	p. 362	120 €
IN	B580-439	Unslotted Waste 1¼ ", enamelled, Cacao	p. 362	120 €
IN	B580-440	Unslotted Waste 1¼ ", enamelled, Snow	p. 362	120 €
IN	B580-441	Unslotted Waste 1¼ ", enamelled, Cream	p. 362	120 €
IN	B580-418	Unslotted Waste 1¼ ", enamelled, Blue Satin	p. 362	120 €
IN	B580-790	Unslotted Waste 1¼ ", enamelled, Midnight	p. 362	120 €
IN	B580-788	Unslotted Waste 1¼ ", enamelled, Daylight	p. 362	120 €
IN	B580-791	Unslotted Waste 1¼ ", enamelled, Forest	p. 362	120 €

Technical information and prices of additional BetteExtras on page 270. You will find the colours in the cover. Subject to alteration and production tolerance. Prices excluding VAT.

BetteArt Monolith

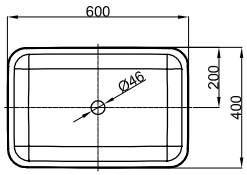

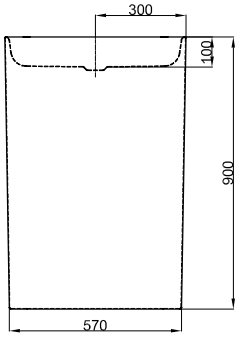

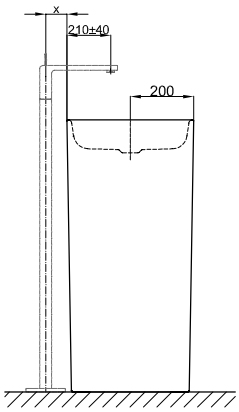

Recommended taps:

spout projection: distance tap x mm + ca. 210 mm from outer edge

Information

Washbasin Monolith, enamelled inside and outside, without taphole and overflow, Unslotted Waste with a White glazed cover.

Scope of delivery

Including fixing materials

Including Unslotted Waste with chromed or colour-matching waste cover when the following colours are selected: 000, 001, 002, 003, 004, 006, 035, 056, 440.

Incl. Siphon.

Incl. noise-reducing sound-dampening pads.

Design: Tesseraux + Partner

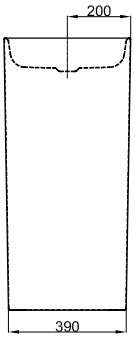

Dimensions

article no.	dimensions in mm
A183	600 × 400 × 100

Subject to alteration and production tolerance.

Dimensions

PG	article no.	dimensions in mm	weight (net)	White 000 → cover	coloured → cover
CO	A183	600 × 400 × 100	38.4 kg	3.040 €	3.157 €

Extras

PG	code	description	see	price
EX	PW	BetteGlaze® Plus for washbasin	p. 274	66 €

Accessories

PG	article no.	description	see	price
CP	Z0013794	Washbasin Spare cover, chrome	p. 363	32 €

Technical information and prices of additional BetteExtras on page 270. You will find the colours in the cover. Subject to alteration and production tolerance. Prices excluding VAT.

BetteComodo Built-In

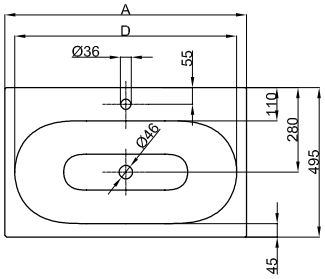

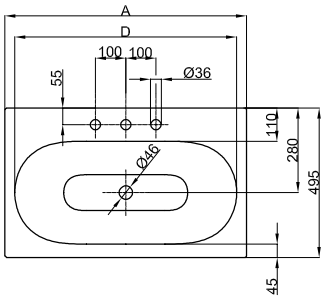

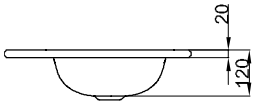

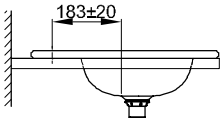

Recommended taps:

spout projection: ca. 183 mm from centre of taphole

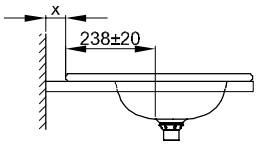

Recommended taps:

spout projection: distance to wall x mm + ca. 238 mm from outer edge

Download note

Template for cutout can be downloaded at www.my-bette.com

Scope of delivery

Including fixing materials

Including noise-reducing pads.

Design: Tesseraux + Partner

Dimensions

article no.	dimensions in mm	Tapholes	A	D
A215	600 × 495 × 120		600	534
A215 HLW1	600 × 495 × 120	o	600	534
A216	800 × 495 × 120		800	734
A216 HLW1	800 × 495 × 120	o	800	734

Subject to alteration and production tolerance.

Dimensions

PG	article no.	dimensions in mm	Tapholes	weight (net)	White 000 → cover	coloured → cover
CO	A215	600 × 495 × 120		7 kg	480 €	597 €
CO	A215 HLW1	600 × 495 × 120	o	7 kg	480 €	597 €
CO	A216	800 × 495 × 120		9.5 kg	520 €	637 €
CO	A216 HLW1	800 × 495 × 120	o	9.5 kg	520 €	637 €

Extras

PG	code	description	see	price
EX	PW	BetteGlaze® Plus for washbasin	p. 274	66 €
EX	HLZ	Tapholes and drilling as per special drawing	p. 276	234 €
EX	HLW3	Drilling for 3-hole-tap	p. 276	96 €
EX	mUeL	with overflow		without surcharge

Accessories

PG	article no.	description	see	price
IN	B580-901	Unslotted Waste 1¼ ", chrome	p. 362	74 €
IN	B580-000	Unslotted Waste 1¼ ", enamelled, White	p. 362	120 €
IN	B580-001	Unslotted Waste 1¼ ", enamelled, Pergamon	p. 362	120 €
IN	B580-002	Unslotted Waste 1¼ ", enamelled, Manhatten	p. 362	120 €
IN	B580-003	Unslotted Waste 1¼ ", enamelled, Bahama beige	p. 362	120 €
IN	B580-004	Unslotted Waste 1¼ ", enamelled, Edelweiss	p. 362	120 €
IN	B580-006	Unslotted Waste 1¼ ", enamelled, Jasmin	p. 362	120 €
IN	B580-035	Unslotted Waste 1¼ ", enamelled, Ebony	p. 362	120 €
IN	B580-056	Unslotted Waste 1¼ ", enamelled, Black	p. 362	120 €
IN	B580-400	Unslotted Waste 1¼ ", enamelled, Raven	p. 362	120 €
IN	B580-401	Unslotted Waste 1¼ ", enamelled, Anthracite	p. 362	120 €
IN	B580-402	Unslotted Waste 1¼ ", enamelled, Slate	p. 362	120 €
IN	B580-403	Unslotted Waste 1¼ ", enamelled, Smoke	p. 362	120 €
IN	B580-404	Unslotted Waste 1¼ ", enamelled, Graphite	p. 362	120 €
IN	B580-410	Unslotted Waste 1¼ ", enamelled, Silver	p. 362	120 €
IN	B580-412	Unslotted Waste 1¼ ", enamelled, Quartz	p. 362	120 €
IN	B580-413	Unslotted Waste 1¼ ", enamelled, Dust	p. 362	120 €
IN	B580-414	Unslotted Waste 1¼ ", enamelled, Flint	p. 362	120 €
IN	B580-415	Unslotted Waste 1¼ ", enamelled, Cashmere	p. 362	120 €
IN	B580-416	Unslotted Waste 1¼ ", enamelled, Stone	p. 362	120 €
IN	B580-417	Unslotted Waste 1¼ ", enamelled, Hazel	p. 362	120 €
IN	B580-422	Unslotted Waste 1¼ ", enamelled, Beige	p. 362	120 €
IN	B580-423	Unslotted Waste 1¼ ", enamelled, Flax	p. 362	120 €
IN	B580-424	Unslotted Waste 1¼ ", enamelled, Sand	p. 362	120 €
IN	B580-425	Unslotted Waste 1¼ ", enamelled, Greige	p. 362	120 €
IN	B580-430	Unslotted Waste 1¼ ", enamelled, Coffee	p. 362	120 €
IN	B580-434	Unslotted Waste 1¼ ", enamelled, Ebano	p. 362	120 €
IN	B580-438	Unslotted Waste 1¼ ", enamelled, Taupe	p. 362	120 €
IN	B580-439	Unslotted Waste 1¼ ", enamelled, Cacao	p. 362	120 €
IN	B580-440	Unslotted Waste 1¼ ", enamelled, Snow	p. 362	120 €
IN	B580-441	Unslotted Waste 1¼ ", enamelled, Cream	p. 362	120 €
IN	B580-418	Unslotted Waste 1¼ ", enamelled, Blue Satin	p. 362	120 €
IN	B580-790	Unslotted Waste 1¼ ", enamelled, Midnight	p. 362	120 €
IN	B580-788	Unslotted Waste 1¼ ", enamelled, Daylight	p. 362	120 €
IN	B580-791	Unslotted Waste 1¼ ", enamelled, Forest	p. 362	120 €
IN	B616-901	Waste- and overflow fitting BetteFlow, chrome*	p. 365	94 €
IN	B616-000	Waste- and overflow fitting BetteFlow, White*	p. 365	106 €

* For washbasins with tapholes. Activated by a lever on the washbasin fitting

Technical information and prices of additional BetteExtras on page 270. You will find the colours in the cover. Subject to alteration and production tolerance. Prices excluding VAT.

BetteComodo Undermounted

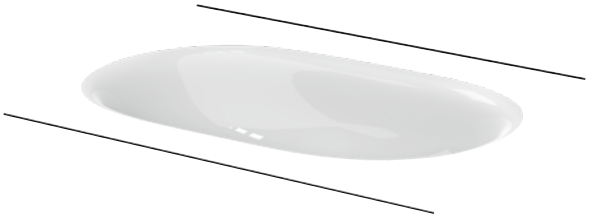

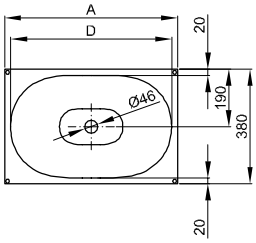

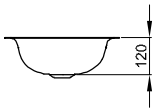

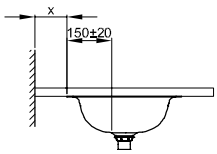

Recommended taps:

spout projection: distance to wall x mm + ca. 150 mm from outer edge

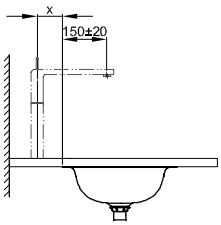

Recommended taps:

spout projection: distance tap x mm + ca. 150 mm from outer edge

Download note

Template for cutout can be downloaded at www.my-bette.com

Scope of delivery

Including noise-reducing pads.

Design: Tesseraux + Partner

Dimensions

article no.	dimensions in mm	A	D
A217	574 × 380 × 120	574	534
A218	774 × 380 × 120	774	734

Subject to alteration and production tolerance.

Dimensions

PG	article no.	dimensions in mm	weight (net)	White 000 → cover	coloured → cover
CO	A217	574 × 380 × 120	4.8 kg	573 €	690 €
CO	A218	774 × 380 × 120	6.5 kg	600 €	717 €

Please note the ordering information on page 5.

Extras

PG	code	description	see	price
EX	PW	BetteGlaze® Plus for washbasin	p. 274	66 €

Accessories

PG	article no.	description	see	price
IN	B580-901	Unslotted Waste 1¼ ", chrome	p. 362	74 €
IN	B580-000	Unslotted Waste 1¼ ", enamelled, White	p. 362	120 €
IN	B580-001	Unslotted Waste 1¼ ", enamelled, Pergamon	p. 362	120 €
IN	B580-002	Unslotted Waste 1¼ ", enamelled, Manhatten	p. 362	120 €
IN	B580-003	Unslotted Waste 1¼ ", enamelled, Bahama beige	p. 362	120 €
IN	B580-004	Unslotted Waste 1¼ ", enamelled, Edelweiss	p. 362	120 €
IN	B580-006	Unslotted Waste 1¼ ", enamelled, Jasmin	p. 362	120 €
IN	B580-035	Unslotted Waste 1¼ ", enamelled, Ebony	p. 362	120 €
IN	B580-056	Unslotted Waste 1¼ ", enamelled, Black	p. 362	120 €
IN	B580-400	Unslotted Waste 1¼ ", enamelled, Raven	p. 362	120 €
IN	B580-401	Unslotted Waste 1¼ ", enamelled, Anthracite	p. 362	120 €
IN	B580-402	Unslotted Waste 1¼ ", enamelled, Slate	p. 362	120 €
IN	B580-403	Unslotted Waste 1¼ ", enamelled, Smoke	p. 362	120 €
IN	B580-404	Unslotted Waste 1¼ ", enamelled, Graphite	p. 362	120 €
IN	B580-410	Unslotted Waste 1¼ ", enamelled, Silver	p. 362	120 €
IN	B580-412	Unslotted Waste 1¼ ", enamelled, Quartz	p. 362	120 €
IN	B580-413	Unslotted Waste 1¼ ", enamelled, Dust	p. 362	120 €
IN	B580-414	Unslotted Waste 1¼ ", enamelled, Flint	p. 362	120 €
IN	B580-415	Unslotted Waste 1¼ ", enamelled, Cashmere	p. 362	120 €
IN	B580-416	Unslotted Waste 1¼ ", enamelled, Stone	p. 362	120 €
IN	B580-417	Unslotted Waste 1¼ ", enamelled, Hazel	p. 362	120 €
IN	B580-422	Unslotted Waste 1¼ ", enamelled, Beige	p. 362	120 €
IN	B580-423	Unslotted Waste 1¼ ", enamelled, Flax	p. 362	120 €
IN	B580-424	Unslotted Waste 1¼ ", enamelled, Sand	p. 362	120 €
IN	B580-425	Unslotted Waste 1¼ ", enamelled, Greige	p. 362	120 €
IN	B580-430	Unslotted Waste 1¼ ", enamelled, Coffee	p. 362	120 €
IN	B580-434	Unslotted Waste 1¼ ", enamelled, Ebano	p. 362	120 €
IN	B580-438	Unslotted Waste 1¼ ", enamelled, Taupe	p. 362	120 €
IN	B580-439	Unslotted Waste 1¼ ", enamelled, Cacao	p. 362	120 €
IN	B580-440	Unslotted Waste 1¼ ", enamelled, Snow	p. 362	120 €
IN	B580-441	Unslotted Waste 1¼ ", enamelled, Cream	p. 362	120 €
IN	B580-418	Unslotted Waste 1¼ ", enamelled, Blue Satin	p. 362	120 €
IN	B580-790	Unslotted Waste 1¼ ", enamelled, Midnight	p. 362	120 €
IN	B580-788	Unslotted Waste 1¼ ", enamelled, Daylight	p. 362	120 €
IN	B580-791	Unslotted Waste 1¼ ", enamelled, Forest	p. 362	120 €

Technical information and prices of additional BetteExtras on page 270. You will find the colours in the cover. Subject to alteration and production tolerance. Prices excluding VAT.

BetteComodo Undermounted with overflow

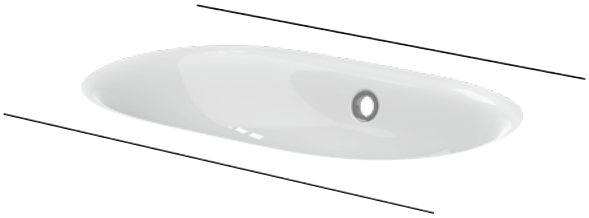

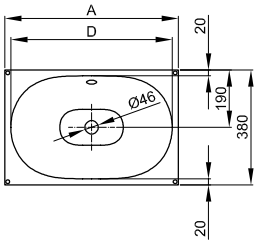

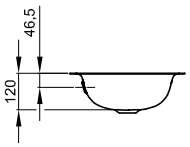

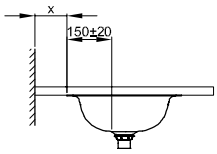

Recommended taps:

spout projection: distance to wall x mm + ca. 150 mm from outer edge

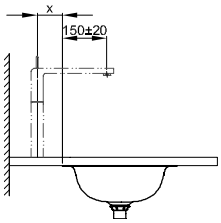

Recommended taps:

spout projection: distance tap x mm + ca. 150 mm from outer edge

Download note

Template for cutout can be downloaded at www.my-bette.com

Scope of delivery

Including noise-reducing pads.

Including overflow fitting, chrome.

Design: Tesseraux + Partner

Dimensions

article no.	dimensions in mm	A	D
A217 mUeL	574 × 380 × 120	574	534
A218 mUeL	774 × 380 × 120	774	734

Subject to alteration and production tolerance.

Dimensions

PG	article no.	dimensions in mm	weight (net)	White 000 → cover	coloured → cover
CO	A217 mUeL	574 × 380 × 120	4.8 kg	573 €	690 €
CO	A218 mUeL	774 × 380 × 120	6.5 kg	600 €	717 €

Please note the ordering information on page 5.

Extras

PG	code	description	see	price
EX	PW	BetteGlaze® Plus for washbasin	p. 274	66 €

Accessories

PG	article no.	description	see	price
IN	B581-000	Pushwaste 1 ¼ ", White varnished	p. 364	122 €
IN	B581-901	Pushwaste 1 ¼ ", chrome	p. 364	95 €

Technical information and prices of additional BetteExtras on page 270. You will find the colours in the cover. Subject to alteration and production tolerance. Prices excluding VAT.

BetteCraft Shell

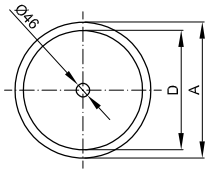

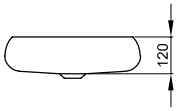

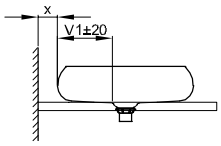

Recommended taps:

spout projection: distance to wall x mm + dimension V1 from outer edge

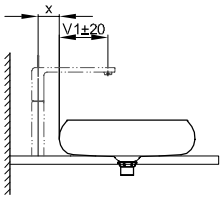

Recommended taps:

spout projection: distance tap x mm + dimension V1 from outer edge

Download note

Template for cutout can be downloaded at www.my-bette.com

Scope of delivery

Including fixing materials

Including noise-reducing pads.

Design: Tesseraux + Partner

Dimensions

article no.	dimensions in mm	A	D	V1
A240	350 × 350 × 120	350	295	130
A241	450 × 450 × 120	450	395	180

Subject to alteration and production tolerance.

Dimensions

PG	article no.	dimensions in mm	weight (net)	White 000 → cover	coloured → cover
CO	A240	350 × 350 × 120	4.5 kg	880 €	997 €
CO	A241	450 × 450 × 120	6.5 kg	924 €	1.041 €

Extras

PG	code	description	see	price
EX	PW	BetteGlaze® Plus for washbasin	p. 274	66 €

Accessories

PG	article no.	description	see	price
IN	B580-901	Unslotted Waste 1¼ ", chrome	p. 362	74 €
IN	B580-000	Unslotted Waste 1¼ ", enamelled, White	p. 362	120 €
IN	B580-001	Unslotted Waste 1¼ ", enamelled, Pergamon	p. 362	120 €
IN	B580-002	Unslotted Waste 1¼ ", enamelled, Manhatten	p. 362	120 €
IN	B580-003	Unslotted Waste 1¼ ", enamelled, Bahama beige	p. 362	120 €
IN	B580-004	Unslotted Waste 1¼ ", enamelled, Edelweiss	p. 362	120 €
IN	B580-006	Unslotted Waste 1¼ ", enamelled, Jasmin	p. 362	120 €
IN	B580-035	Unslotted Waste 1¼ ", enamelled, Ebony	p. 362	120 €
IN	B580-056	Unslotted Waste 1¼ ", enamelled, Black	p. 362	120 €
IN	B580-400	Unslotted Waste 1¼ ", enamelled, Raven	p. 362	120 €
IN	B580-401	Unslotted Waste 1¼ ", enamelled, Anthracite	p. 362	120 €
IN	B580-402	Unslotted Waste 1¼ ", enamelled, Slate	p. 362	120 €
IN	B580-403	Unslotted Waste 1¼ ", enamelled, Smoke	p. 362	120 €
IN	B580-404	Unslotted Waste 1¼ ", enamelled, Graphite	p. 362	120 €
IN	B580-410	Unslotted Waste 1¼ ", enamelled, Silver	p. 362	120 €
IN	B580-412	Unslotted Waste 1¼ ", enamelled, Quartz	p. 362	120 €
IN	B580-413	Unslotted Waste 1¼ ", enamelled, Dust	p. 362	120 €
IN	B580-414	Unslotted Waste 1¼ ", enamelled, Flint	p. 362	120 €
IN	B580-415	Unslotted Waste 1¼ ", enamelled, Cashmere	p. 362	120 €
IN	B580-416	Unslotted Waste 1¼ ", enamelled, Stone	p. 362	120 €
IN	B580-417	Unslotted Waste 1¼ ", enamelled, Hazel	p. 362	120 €
IN	B580-422	Unslotted Waste 1¼ ", enamelled, Beige	p. 362	120 €
IN	B580-423	Unslotted Waste 1¼ ", enamelled, Flax	p. 362	120 €
IN	B580-424	Unslotted Waste 1¼ ", enamelled, Sand	p. 362	120 €
IN	B580-425	Unslotted Waste 1¼ ", enamelled, Greige	p. 362	120 €
IN	B580-430	Unslotted Waste 1¼ ", enamelled, Coffee	p. 362	120 €
IN	B580-434	Unslotted Waste 1¼ ", enamelled, Ebano	p. 362	120 €
IN	B580-438	Unslotted Waste 1¼ ", enamelled, Taupe	p. 362	120 €
IN	B580-439	Unslotted Waste 1¼ ", enamelled, Cacao	p. 362	120 €
IN	B580-440	Unslotted Waste 1¼ ", enamelled, Snow	p. 362	120 €
IN	B580-441	Unslotted Waste 1¼ ", enamelled, Cream	p. 362	120 €
IN	B580-418	Unslotted Waste 1¼ ", enamelled, Blue Satin	p. 362	120 €
IN	B580-790	Unslotted Waste 1¼ ", enamelled, Midnight	p. 362	120 €
IN	B580-788	Unslotted Waste 1¼ ", enamelled, Daylight	p. 362	120 €
IN	B580-791	Unslotted Waste 1¼ ", enamelled, Forest	p. 362	120 €

Technical information and prices of additional BetteExtras on page 270. You will find the colours in the cover. Subject to alteration and production tolerance. Prices excluding VAT.

BetteLoft Built-In

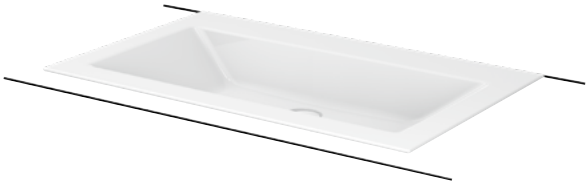

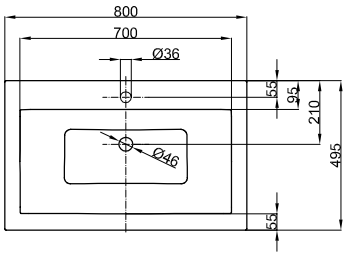

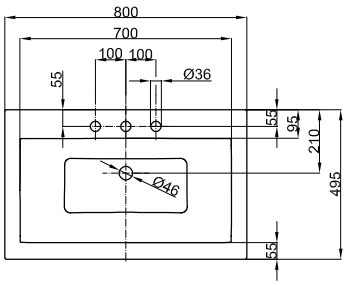

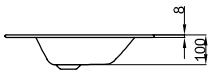

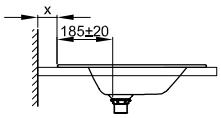

Recommended taps:

Spout projection: distance to wall x mm + ca. 185 mm from outer edge

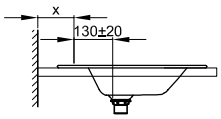

Recommended taps:

distance to wall x mm + ca. 130 mm from centre of taphole

Download note

Template for cutout can be downloaded at www.my-bette.com

Scope of delivery

Including fixing materials

Including noise-reducing pads.

Design: Tesseraux + Partner

Dimensions

article no.	dimensions in mm	Tapholes
A230	800 × 495 × 100	
A230 HLW1	800 × 495 × 100	o

Subject to alteration and production tolerance.

Dimensions

PG	article no.	dimensions in mm	Tapholes	weight (net)	White 000 → cover	coloured → cover
CO	A230	800 × 495 × 100		8 kg	859 €	976 €
CO	A230 HLW1	800 × 495 × 100	o	8 kg	859 €	976 €

Please note the ordering information on page 5.

Extras

PG	code	description	see	price
EX	PW	BetteGlaze® Plus for washbasin	p. 274	66 €
EX	HLZ	Tapholes and drilling as per special drawing	p. 276	234 €
EX	HLW3	Drilling for 3-hole-tap	p. 276	96 €

Accessories

PG	article no.	description	see	price
IN	B580-901	Unslotted Waste 1¼ ", chrome	p. 362	74 €
IN	B580-000	Unslotted Waste 1¼ ", enamelled, White	p. 362	120 €
IN	B580-001	Unslotted Waste 1¼ ", enamelled, Pergamon	p. 362	120 €
IN	B580-002	Unslotted Waste 1¼ ", enamelled, Manhatten	p. 362	120 €
IN	B580-003	Unslotted Waste 1¼ ", enamelled, Bahama beige	p. 362	120 €
IN	B580-004	Unslotted Waste 1¼ ", enamelled, Edelweiss	p. 362	120 €
IN	B580-006	Unslotted Waste 1¼ ", enamelled, Jasmin	p. 362	120 €
IN	B580-035	Unslotted Waste 1¼ ", enamelled, Ebony	p. 362	120 €
IN	B580-056	Unslotted Waste 1¼ ", enamelled, Black	p. 362	120 €
IN	B580-400	Unslotted Waste 1¼ ", enamelled, Raven	p. 362	120 €
IN	B580-401	Unslotted Waste 1¼ ", enamelled, Anthracite	p. 362	120 €
IN	B580-402	Unslotted Waste 1¼ ", enamelled, Slate	p. 362	120 €
IN	B580-403	Unslotted Waste 1¼ ", enamelled, Smoke	p. 362	120 €
IN	B580-404	Unslotted Waste 1¼ ", enamelled, Graphite	p. 362	120 €
IN	B580-410	Unslotted Waste 1¼ ", enamelled, Silver	p. 362	120 €
IN	B580-412	Unslotted Waste 1¼ ", enamelled, Quartz	p. 362	120 €
IN	B580-413	Unslotted Waste 1¼ ", enamelled, Dust	p. 362	120 €
IN	B580-414	Unslotted Waste 1¼ ", enamelled, Flint	p. 362	120 €
IN	B580-415	Unslotted Waste 1¼ ", enamelled, Cashmere	p. 362	120 €
IN	B580-416	Unslotted Waste 1¼ ", enamelled, Stone	p. 362	120 €
IN	B580-417	Unslotted Waste 1¼ ", enamelled, Hazel	p. 362	120 €
IN	B580-422	Unslotted Waste 1¼ ", enamelled, Beige	p. 362	120 €
IN	B580-423	Unslotted Waste 1¼ ", enamelled, Flax	p. 362	120 €
IN	B580-424	Unslotted Waste 1¼ ", enamelled, Sand	p. 362	120 €
IN	B580-425	Unslotted Waste 1¼ ", enamelled, Greige	p. 362	120 €
IN	B580-430	Unslotted Waste 1¼ ", enamelled, Coffee	p. 362	120 €
IN	B580-434	Unslotted Waste 1¼ ", enamelled, Ebano	p. 362	120 €
IN	B580-438	Unslotted Waste 1¼ ", enamelled, Taupe	p. 362	120 €
IN	B580-439	Unslotted Waste 1¼ ", enamelled, Cacao	p. 362	120 €
IN	B580-440	Unslotted Waste 1¼ ", enamelled, Snow	p. 362	120 €
IN	B580-441	Unslotted Waste 1¼ ", enamelled, Cream	p. 362	120 €
IN	B580-418	Unslotted Waste 1¼ ", enamelled, Blue Satin	p. 362	120 €
IN	B580-790	Unslotted Waste 1¼ ", enamelled, Midnight	p. 362	120 €
IN	B580-788	Unslotted Waste 1¼ ", enamelled, Daylight	p. 362	120 €
IN	B580-791	Unslotted Waste 1¼ ", enamelled, Forest	p. 362	120 €
IN	B616-000	Waste- and overflow fitting BetteFlow, White*	p. 365	106 €
IN	B616-901	Waste- and overflow fitting BetteFlow, chrome*	p. 365	94 €

* For washbasins with tapholes. Activated by a lever on the washbasin fitting

Technical information and prices of additional BetteExtras on page 270. You will find the colours in the cover. Subject to alteration and production tolerance. Prices excluding VAT.

BetteLoft Undermounted

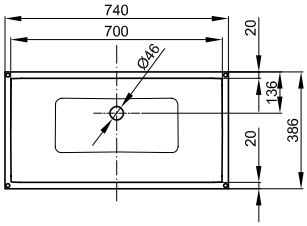

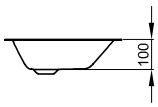

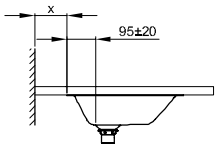

Recommended taps:

spout projection: distance to wall x mm + ca. 95 mm from outer edge

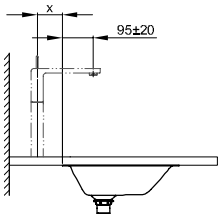

Recommended taps:

spout projection: distance tap x mm + ca. 95 mm from outer edge

Download note

Template for cutout can be downloaded at www.my-bette.com

Scope of delivery

Including noise-reducing pads.

Design: Tesseraux + Partner

Dimensions

article no.	dimensions in mm
A231	740 × 386 × 100

Subject to alteration and production tolerance.

Dimensions

PG	article no.	dimensions in mm	weight (net)	White 000 → cover	coloured → cover
CO	A231	740 × 386 × 100	5.8 kg	600 €	717 €

Please note the ordering information on page 5.

Extras

PG	code	description	see	price
EX	PW	BetteGlaze® Plus for washbasin	p. 274	66 €

Accessories

PG	article no.	description	see	price
IN	B580-901	Unslotted Waste 1¼ ", chrome	p. 362	74 €
IN	B580-000	Unslotted Waste 1¼ ", enamelled, White	p. 362	120 €
IN	B580-001	Unslotted Waste 1¼ ", enamelled, Pergamon	p. 362	120 €
IN	B580-002	Unslotted Waste 1¼ ", enamelled, Manhatten	p. 362	120 €
IN	B580-003	Unslotted Waste 1¼ ", enamelled, Bahama beige	p. 362	120 €
IN	B580-004	Unslotted Waste 1¼ ", enamelled, Edelweiss	p. 362	120 €
IN	B580-006	Unslotted Waste 1¼ ", enamelled, Jasmin	p. 362	120 €
IN	B580-035	Unslotted Waste 1¼ ", enamelled, Ebony	p. 362	120 €
IN	B580-056	Unslotted Waste 1¼ ", enamelled, Black	p. 362	120 €
IN	B580-400	Unslotted Waste 1¼ ", enamelled, Raven	p. 362	120 €
IN	B580-401	Unslotted Waste 1¼ ", enamelled, Anthracite	p. 362	120 €
IN	B580-402	Unslotted Waste 1¼ ", enamelled, Slate	p. 362	120 €
IN	B580-403	Unslotted Waste 1¼ ", enamelled, Smoke	p. 362	120 €
IN	B580-404	Unslotted Waste 1¼ ", enamelled, Graphite	p. 362	120 €
IN	B580-410	Unslotted Waste 1¼ ", enamelled, Silver	p. 362	120 €
IN	B580-412	Unslotted Waste 1¼ ", enamelled, Quartz	p. 362	120 €
IN	B580-413	Unslotted Waste 1¼ ", enamelled, Dust	p. 362	120 €
IN	B580-414	Unslotted Waste 1¼ ", enamelled, Flint	p. 362	120 €
IN	B580-415	Unslotted Waste 1¼ ", enamelled, Cashmere	p. 362	120 €
IN	B580-416	Unslotted Waste 1¼ ", enamelled, Stone	p. 362	120 €
IN	B580-417	Unslotted Waste 1¼ ", enamelled, Hazel	p. 362	120 €
IN	B580-422	Unslotted Waste 1¼ ", enamelled, Beige	p. 362	120 €
IN	B580-423	Unslotted Waste 1¼ ", enamelled, Flax	p. 362	120 €
IN	B580-424	Unslotted Waste 1¼ ", enamelled, Sand	p. 362	120 €
IN	B580-425	Unslotted Waste 1¼ ", enamelled, Greige	p. 362	120 €
IN	B580-430	Unslotted Waste 1¼ ", enamelled, Coffee	p. 362	120 €
IN	B580-434	Unslotted Waste 1¼ ", enamelled, Ebano	p. 362	120 €
IN	B580-438	Unslotted Waste 1¼ ", enamelled, Taupe	p. 362	120 €
IN	B580-439	Unslotted Waste 1¼ ", enamelled, Cacao	p. 362	120 €
IN	B580-440	Unslotted Waste 1¼ ", enamelled, Snow	p. 362	120 €
IN	B580-441	Unslotted Waste 1¼ ", enamelled, Cream	p. 362	120 €
IN	B580-418	Unslotted Waste 1¼ ", enamelled, Blue Satin	p. 362	120 €
IN	B580-790	Unslotted Waste 1¼ ", enamelled, Midnight	p. 362	120 €
IN	B580-788	Unslotted Waste 1¼ ", enamelled, Daylight	p. 362	120 €
IN	B580-791	Unslotted Waste 1¼ ", enamelled, Forest	p. 362	120 €

Technical information and prices of additional BetteExtras on page 270. You will find the colours in the cover. Subject to alteration and production tolerance. Prices excluding VAT.

BetteLoft Undermounted with overflow

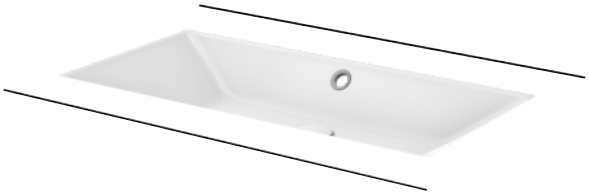

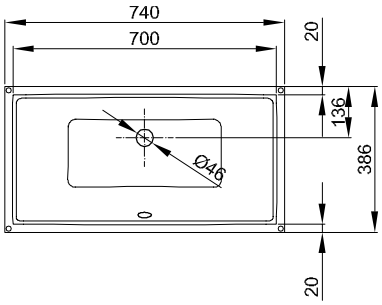

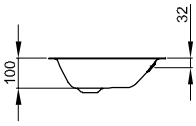

Download note

Template for cutout can be downloaded at www.my-bette.com

Scope of delivery

Including noise-reducing pads.

Including overflow fitting, chrome.

Design: Tesseraux + Partner

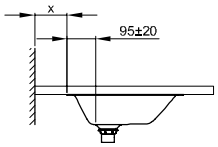

Recommended taps:

spout projection: distance to wall x mm + ca. 140 mm from outer edge

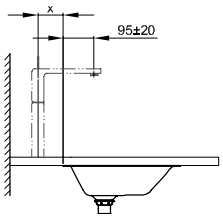

Recommended taps:

spout projection: distance tap x mm + ca. 140 mm from outer edge

Dimensions

article no.	dimensions in mm
A231 mUeL	740 × 386 × 100

Subject to alteration and production tolerance.

Dimensions

PG	article no.	dimensions in mm	weight (net)	White 000 → cover	coloured → cover
CO	A231 mUeL	740 × 386 × 100	5.8 kg	600 €	717 €

Please note the ordering information on page 5.

Extras

PG	code	description	see	price
EX	PW	BetteGlaze® Plus for washbasin	p. 274	66 €

Accessories

PG	article no.	description	see	price
IN	B581-000	Pushwaste 1 ¼ ", White varnished	p. 364	122 €
IN	B581-901	Pushwaste 1 ¼ ", chrome	p. 364	95 €

Technical information and prices of additional BetteExtras on page 270. You will find the colours in the cover. Subject to alteration and production tolerance. Prices excluding VAT.

BetteLoft Ornament Wall Mounted, 1 row

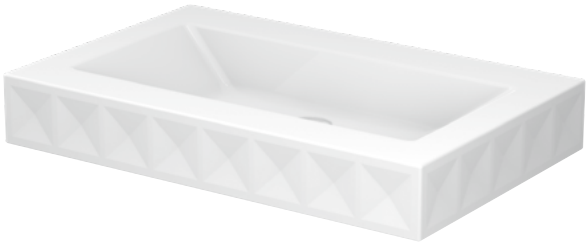

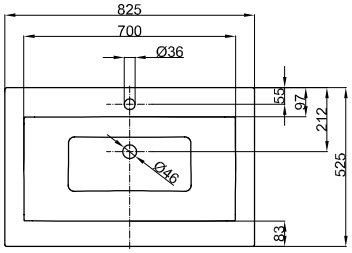

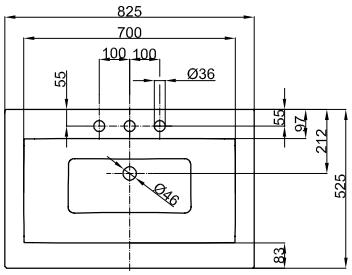

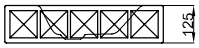

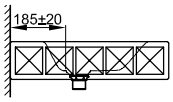

Recommended taps:

Spout projection: ca. 185 mm from wall

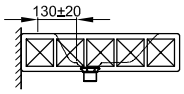

Recommended taps:

Spout projection: ca. 130 mm from centre of taphole

Scope of delivery

Including fixing materials

Including noise-reducing pads.

Design: Tesseraux + Partner

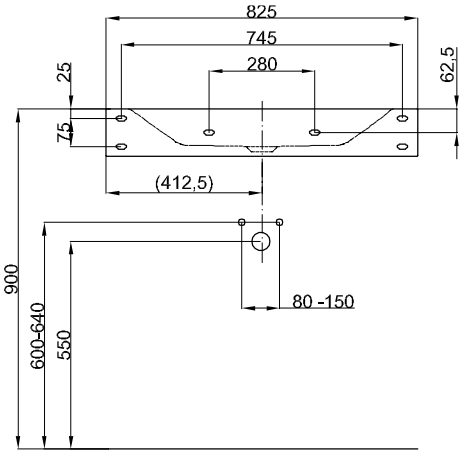

Dimensions for installation and connection:

Dimensions

article no.	dimensions in mm	Tapholes	A	B
A230 SWV1A	825 × 525 × 100		825	525
A230 SWV1A,HLW1	825 × 525 × 100	o	825	525

Subject to alteration and production tolerance.

Dimensions

PG	article no.	dimensions in mm	Tapholes	weight (net)	White 000 → cover	coloured → cover
CO	A230 SWV1A	825 × 525 × 100		13.8 kg	1.412 €	1.529 €
CO	A230 SWV1A,HLW1	825 × 525 × 100	o	13.8 kg	1.412 €	1.529 €

Please note the ordering information on page 5.

Extras

PG	code	description	see	price
EX	PW	BetteGlaze® Plus for washbasin	p. 274	66 €
EX	HLZ	Tapholes and drilling as per special drawing	p. 276	234 €
EX	HLW3	Drilling for 3-hole-tap	p. 276	96 €

Accessories

PG	article no.	description	see	price
IN	B580-790	Unslotted Waste 1¼ ", enamelled, Midnight	p. 362	120 €
IN	B580-788	Unslotted Waste 1¼ ", enamelled, Daylight	p. 362	120 €
IN	B580-901	Unslotted Waste 1¼ ", chrome	p. 362	74 €
IN	B580-000	Unslotted Waste 1¼ ", enamelled, White	p. 362	120 €
IN	B580-418	Unslotted Waste 1¼ ", enamelled, Blue Satin	p. 362	120 €
IN	B580-056	Unslotted Waste 1¼ ", enamelled, Black	p. 362	120 €
IN	B616-901	Waste- and overflow fitting BetteFlow, chrome*	p. 365	94 €
IN	B616-000	Waste- and overflow fitting BetteFlow, White*	p. 365	106 €

* For washbasins with tapholes. Activated by a lever on the washbasin fitting

Technical information and prices of additional BetteExtras on page 270. You will find the colours in the cover. Subject to alteration and production tolerance. Prices excluding VAT.

BetteLoft Ornament Wall Mounted, 4 rows

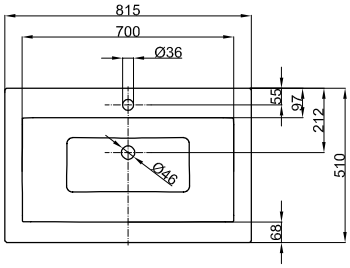

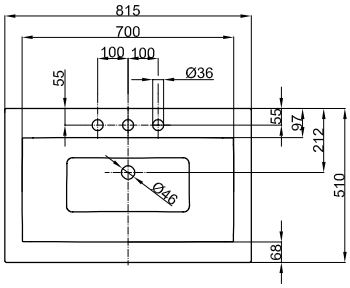

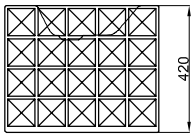

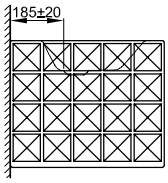

Recommended taps:

Spout projection: ca. 185 mm from wall

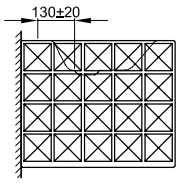

Recommended taps:

Spout projection: ca. 130 mm from centre of taphole

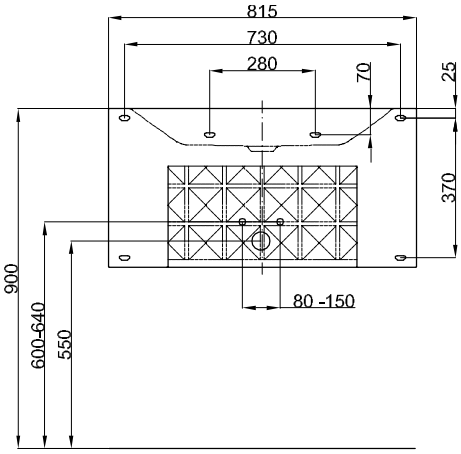

Dimensions for installation and connection:

Scope of delivery

Including fixing materials

Including noise-reducing pads.

Design: Tesseraux + Partner

Dimensions

article no.	dimensions in mm	Tapholes	A	B
A230 SWV4A	815 × 510 × 100		815	510
A230 SWV4A,HLW1	815 × 510 × 100	o	815	510

Subject to alteration and production tolerance.

Dimensions

PG	article no.	dimensions in mm	Tapholes	weight (net)	White 000 → cover	coloured → cover
CO	A230 SWV4A	815 × 510 × 100		25.2 kg	1.633 €	1.750 €
CO	A230 SWV4A,HLW1	815 × 510 × 100	o	25.2 kg	1.633 €	1.750 €

Please note the ordering information on page 5.

Extras

PG	code	description	see	price
EX	PW	BetteGlaze® Plus for washbasin	p. 274	66 €
EX	HLZ	Tapholes and drilling as per special drawing	p. 276	234 €
EX	HLW3	Drilling for 3-hole-tap	p. 276	96 €

Accessories

PG	article no.	description	see	price
IN	B580-056	Unslotted Waste 1¼ ", enamelled, Black	p. 362	120 €
IN	B580-418	Unslotted Waste 1¼ ", enamelled, Blue Satin	p. 362	120 €
IN	B580-901	Unslotted Waste 1¼ ", chrome	p. 362	74 €
IN	B580-000	Unslotted Waste 1¼ ", enamelled, White	p. 362	120 €
IN	B580-788	Unslotted Waste 1¼ ", enamelled, Daylight	p. 362	120 €
IN	B580-790	Unslotted Waste 1¼ ", enamelled, Midnight	p. 362	120 €
IN	B616-000	Waste- and overflow fitting BetteFlow, White*	p. 365	106 €
IN	B616-901	Waste- and overflow fitting BetteFlow, chrome*	p. 365	94 €

* For washbasins with tapholes. Activated by a lever on the washbasin fitting

Technical information and prices of additional BetteExtras on page 270. You will find the colours in the cover. Subject to alteration and production tolerance. Prices excluding VAT.

BetteLux Built-In

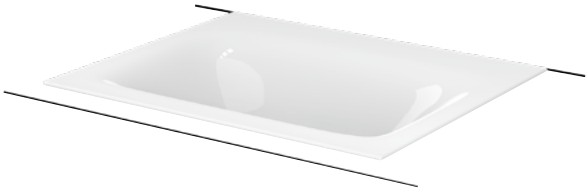

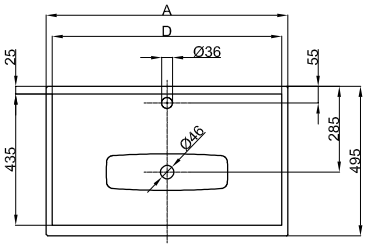

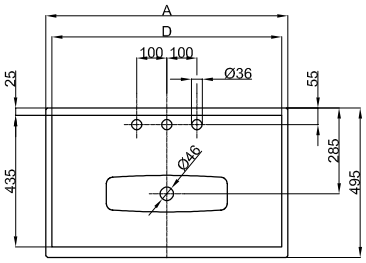

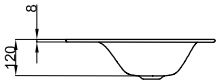

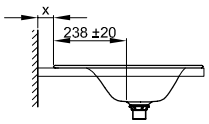

Recommended taps:

spout projection: distance to wall x mm + ca. 238 mm from outer edge

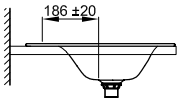

Recommended taps:

spout projection: ca. 186 mm from centre of taphole

Download note

Template for cutout can be downloaded at www.my-bette.com

Scope of delivery

Including fixing materials

Including noise-reducing pads.

Design: Tesseraux + Partner

Dimensions

article no.	dimensions in mm	Tapholes	A	D
A160	600 × 495 × 120		600	560
A160 HLW1	600 × 495 × 120	o	600	560
A161	800 × 495 × 120		800	760
A161 HLW1	800 × 495 × 120	o	800	760

Subject to alteration and production tolerance.

Dimensions

PG	article no.	dimensions in mm	Tapholes	weight (net)	White 000 → cover	coloured → cover
CO	A160	600 × 495 × 120		5.65 kg	822 €	939 €
CO	A160 HLW1	600 × 495 × 120	o	5.65 kg	822 €	939 €
CO	A161	800 × 495 × 120		7.3 kg	859 €	976 €
CO	A161 HLW1	800 × 495 × 120	o	7.3 kg	859 €	976 €

Please note the ordering information on page 5.

Extras

PG	code	description	see	price
EX	PW	BetteGlaze® Plus for washbasin	p. 274	66 €
EX	HLZ	Tapholes and drilling as per special drawing	p. 276	234 €
EX	HLW3	Drilling for 3-hole-tap	p. 276	96 €

Accessories

PG	article no.	description	see	price
IN	B580-901	Unslotted Waste 1¼ ", chrome	p. 362	74 €
IN	B580-000	Unslotted Waste 1¼ ", enamelled, White	p. 362	120 €
IN	B580-001	Unslotted Waste 1¼ ", enamelled, Pergamon	p. 362	120 €
IN	B580-002	Unslotted Waste 1¼ ", enamelled, Manhatten	p. 362	120 €
IN	B580-003	Unslotted Waste 1¼ ", enamelled, Bahama beige	p. 362	120 €
IN	B580-004	Unslotted Waste 1¼ ", enamelled, Edelweiss	p. 362	120 €
IN	B580-006	Unslotted Waste 1¼ ", enamelled, Jasmin	p. 362	120 €
IN	B580-035	Unslotted Waste 1¼ ", enamelled, Ebony	p. 362	120 €
IN	B580-056	Unslotted Waste 1¼ ", enamelled, Black	p. 362	120 €
IN	B580-400	Unslotted Waste 1¼ ", enamelled, Raven	p. 362	120 €
IN	B580-401	Unslotted Waste 1¼ ", enamelled, Anthracite	p. 362	120 €
IN	B580-402	Unslotted Waste 1¼ ", enamelled, Slate	p. 362	120 €
IN	B580-403	Unslotted Waste 1¼ ", enamelled, Smoke	p. 362	120 €
IN	B580-404	Unslotted Waste 1¼ ", enamelled, Graphite	p. 362	120 €
IN	B580-410	Unslotted Waste 1¼ ", enamelled, Silver	p. 362	120 €
IN	B580-412	Unslotted Waste 1¼ ", enamelled, Quartz	p. 362	120 €
IN	B580-413	Unslotted Waste 1¼ ", enamelled, Dust	p. 362	120 €
IN	B580-414	Unslotted Waste 1¼ ", enamelled, Flint	p. 362	120 €
IN	B580-415	Unslotted Waste 1¼ ", enamelled, Cashmere	p. 362	120 €
IN	B580-416	Unslotted Waste 1¼ ", enamelled, Stone	p. 362	120 €
IN	B580-417	Unslotted Waste 1¼ ", enamelled, Hazel	p. 362	120 €
IN	B580-422	Unslotted Waste 1¼ ", enamelled, Beige	p. 362	120 €
IN	B580-423	Unslotted Waste 1¼ ", enamelled, Flax	p. 362	120 €
IN	B580-424	Unslotted Waste 1¼ ", enamelled, Sand	p. 362	120 €
IN	B580-425	Unslotted Waste 1¼ ", enamelled, Greige	p. 362	120 €
IN	B580-430	Unslotted Waste 1¼ ", enamelled, Coffee	p. 362	120 €
IN	B580-434	Unslotted Waste 1¼ ", enamelled, Ebano	p. 362	120 €
IN	B580-438	Unslotted Waste 1¼ ", enamelled, Taupe	p. 362	120 €
IN	B580-439	Unslotted Waste 1¼ ", enamelled, Cacao	p. 362	120 €
IN	B580-440	Unslotted Waste 1¼ ", enamelled, Snow	p. 362	120 €
IN	B580-441	Unslotted Waste 1¼ ", enamelled, Cream	p. 362	120 €
IN	B580-418	Unslotted Waste 1¼ ", enamelled, Blue Satin	p. 362	120 €
IN	B580-790	Unslotted Waste 1¼ ", enamelled, Midnight	p. 362	120 €
IN	B580-788	Unslotted Waste 1¼ ", enamelled, Daylight	p. 362	120 €
IN	B580-791	Unslotted Waste 1¼ ", enamelled, Forest	p. 362	120 €
IN	B616-000	Waste- and overflow fitting BetteFlow, White*	p. 365	106 €
IN	B616-901	Waste- and overflow fitting BetteFlow, chrome*	p. 365	94 €

* For washbasins with tapholes. Activated by a lever on the washbasin fitting

Technical information and prices of additional BetteExtras on page 270. You will find the colours in the cover. Subject to alteration and production tolerance. Prices excluding VAT.

BetteLux Shape

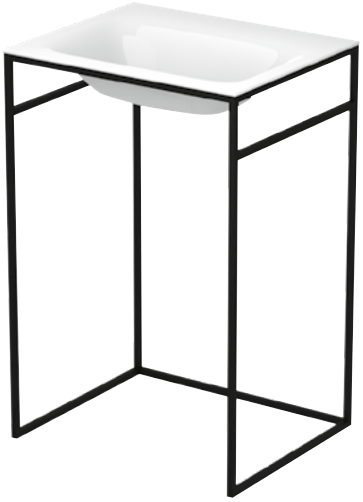

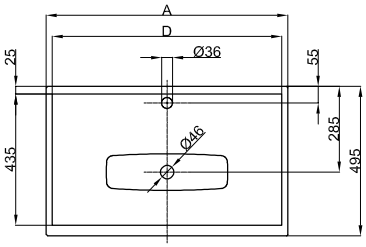

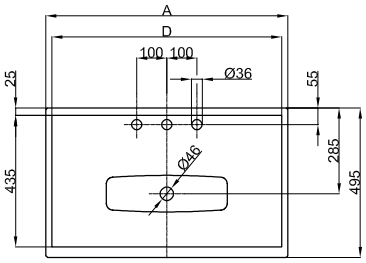

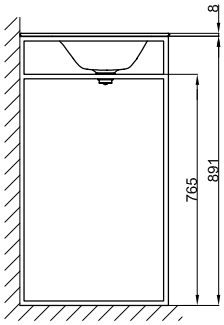

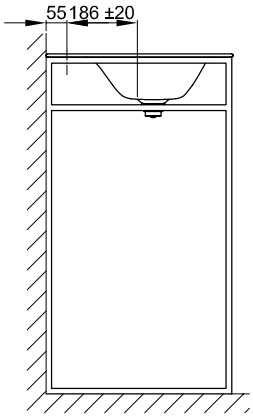

Information

Built-in washbasin for BetteLux Shape washbasin frame, enamelled inside and outside, without overflow

Washbasin and frame are fixed at the factory, but must be ordered separately. An order of the individual components is not possible.

Scope of delivery

Including fixing materials, prefitted washbasin adapter 1¼" and Unslotted Waste with chromed or colour-matching waste cover when the following colours are selected: 000, 001, 002, 003, 004, 006, 035, 056, 440.

Design: Tesseraux + Partner

Recommended taps:

spout projection: distance to wall 55 mm + ca. 186 mm from centre of taphole

Dimensions

article no.	dimensions in mm	Tapholes	A	D	W
A170	600 × 495 × 120		600	560	360
A170 HLW1	600 × 495 × 120	o	600	560	360
A171	800 × 495 × 120		800	760	560
A171 HLW1	800 × 495 × 120	o	800	760	560
A172	1000 × 495 × 120		1000	960	760
A172 HLW1	1000 × 495 × 120	o	1000	960	760

Subject to alteration and production tolerance.

Dimensions

PG	article no.	dimensions in mm	Tapholes	weight (net)	White 000 → cover	coloured → cover
CO	A170	600 × 495 × 120		6.1 kg	1.333 €	1.450 €
CO	A170 HLW1	600 × 495 × 120	o	6.1 kg	1.333 €	1.450 €
CO	A171	800 × 495 × 120		7.9 kg	1.394 €	1.511 €
CO	A171 HLW1	800 × 495 × 120	o	7.9 kg	1.394 €	1.511 €
CO	A172	1000 × 495 × 120		9.5 kg	1.394 €	1.511 €
CO	A172 HLW1	1000 × 495 × 120	o	9.5 kg	1.394 €	1.511 €

Please note the ordering information on page 5.

Extras

PG	code	description	see	price
EX	PW	BetteGlaze® Plus for washbasin	p. 274	66 €
EX	HLZ	Tapholes and drilling as per special drawing	p. 276	234 €
EX	HLW3	Drilling for 3-hole-tap	p. 276	96 €

Frame (required accessories)

PG	article no.	dimensions in mm	White matt 807 Black matt 815 → cover
IN	Q010	600 × 495 × 890	1.040 €
IN	Q011	800 × 495 × 890	1.092 €
IN	Q012	1000 × 495 × 890	1.144 €

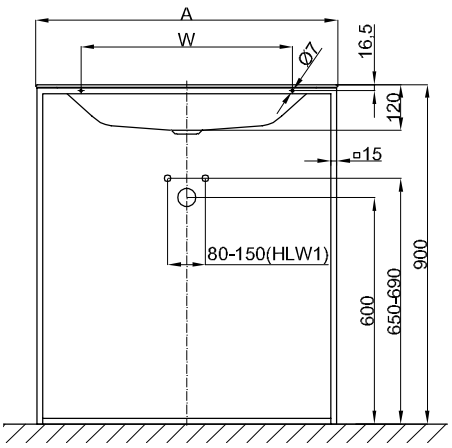

Dimensions for installation and connection

Technical information and prices of additional BetteExtras on page 270. You will find the colours in the cover. Subject to alteration and production tolerance. Prices excluding VAT.

BetteLux Oval Built-In

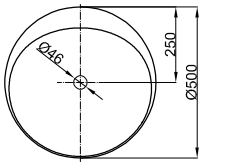

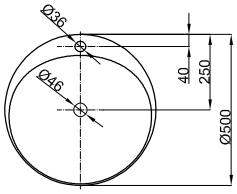

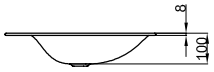

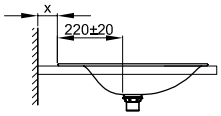

Recommended taps:

Spout projection: distance to wall x mm + ca. 220 mm from outer edge

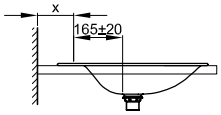

Recommended taps:

distance to wall x mm + ca. 165 mm from centre of taphole

Download note

Template for cutout can be downloaded at www.my-bette.com

Scope of delivery

Including fixing materials

Including noise-reducing pads.

Dimensions

article no.	dimensions in mm	Tapholes	A	B
A220	500 × 500 × 100		500	500
A220 HLW1	500 × 500 × 100	o	500	500

Subject to alteration and production tolerance.

Dimensions

PG	article no.	dimensions in mm	Tapholes	weight (net)	White 000 → cover	coloured → cover
CO	A220	500 × 500 × 100		4 kg	785 €	902 €
CO	A220 HLW1	500 × 500 × 100	o	4 kg	785 €	902 €

Please note the ordering information on page 5.

Extras

PG	code	description	see	price
EX	PW	BetteGlaze® Plus for washbasin	p. 274	66 €
EX	HLZ	Tapholes and drilling as per special drawing	p. 276	234 €

Accessories

PG	article no.	description	see	price
IN	B580-901	Unslotted Waste 1¼ ", chrome	p. 362	74 €
IN	B580-000	Unslotted Waste 1¼ ", enamelled, White	p. 362	120 €
IN	B580-001	Unslotted Waste 1¼ ", enamelled, Pergamon	p. 362	120 €
IN	B580-002	Unslotted Waste 1¼ ", enamelled, Manhatten	p. 362	120 €
IN	B580-003	Unslotted Waste 1¼ ", enamelled, Bahama beige	p. 362	120 €
IN	B580-004	Unslotted Waste 1¼ ", enamelled, Edelweiss	p. 362	120 €
IN	B580-006	Unslotted Waste 1¼ ", enamelled, Jasmin	p. 362	120 €
IN	B580-035	Unslotted Waste 1¼ ", enamelled, Ebony	p. 362	120 €
IN	B580-056	Unslotted Waste 1¼ ", enamelled, Black	p. 362	120 €
IN	B580-400	Unslotted Waste 1¼ ", enamelled, Raven	p. 362	120 €
IN	B580-401	Unslotted Waste 1¼ ", enamelled, Anthracite	p. 362	120 €
IN	B580-402	Unslotted Waste 1¼ ", enamelled, Slate	p. 362	120 €
IN	B580-403	Unslotted Waste 1¼ ", enamelled, Smoke	p. 362	120 €
IN	B580-404	Unslotted Waste 1¼ ", enamelled, Graphite	p. 362	120 €
IN	B580-410	Unslotted Waste 1¼ ", enamelled, Silver	p. 362	120 €
IN	B580-412	Unslotted Waste 1¼ ", enamelled, Quartz	p. 362	120 €
IN	B580-413	Unslotted Waste 1¼ ", enamelled, Dust	p. 362	120 €
IN	B580-414	Unslotted Waste 1¼ ", enamelled, Flint	p. 362	120 €
IN	B580-415	Unslotted Waste 1¼ ", enamelled, Cashmere	p. 362	120 €
IN	B580-416	Unslotted Waste 1¼ ", enamelled, Stone	p. 362	120 €
IN	B580-417	Unslotted Waste 1¼ ", enamelled, Hazel	p. 362	120 €
IN	B580-422	Unslotted Waste 1¼ ", enamelled, Beige	p. 362	120 €
IN	B580-423	Unslotted Waste 1¼ ", enamelled, Flax	p. 362	120 €
IN	B580-424	Unslotted Waste 1¼ ", enamelled, Sand	p. 362	120 €
IN	B580-425	Unslotted Waste 1¼ ", enamelled, Greige	p. 362	120 €
IN	B580-430	Unslotted Waste 1¼ ", enamelled, Coffee	p. 362	120 €
IN	B580-434	Unslotted Waste 1¼ ", enamelled, Ebano	p. 362	120 €
IN	B580-438	Unslotted Waste 1¼ ", enamelled, Taupe	p. 362	120 €
IN	B580-439	Unslotted Waste 1¼ ", enamelled, Cacao	p. 362	120 €
IN	B580-440	Unslotted Waste 1¼ ", enamelled, Snow	p. 362	120 €
IN	B580-441	Unslotted Waste 1¼ ", enamelled, Cream	p. 362	120 €
IN	B580-418	Unslotted Waste 1¼ ", enamelled, Blue Satin	p. 362	120 €
IN	B580-790	Unslotted Waste 1¼ ", enamelled, Midnight	p. 362	120 €
IN	B580-788	Unslotted Waste 1¼ ", enamelled, Daylight	p. 362	120 €
IN	B580-791	Unslotted Waste 1¼ ", enamelled, Forest	p. 362	120 €

Technical information and prices of additional BetteExtras on page 270. You will find the colours in the cover. Subject to alteration and production tolerance. Prices excluding VAT.

BetteLux Oval Couture

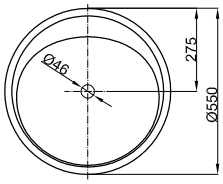

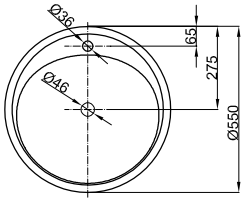

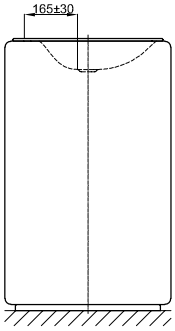

Recommended taps:

Spout projection: ca. 165 mm from centre of taphole

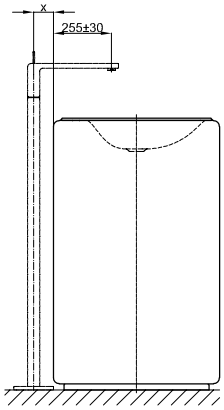

Recommended taps:

Spout projection: distance tap x mm + ca. 255 mm from outer edge

Scope of delivery

Including fixing materials

Including noise-reducing pads.

Design: Tesseraux + Partner

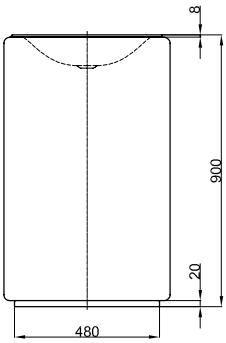

Dimensions

article no.	dimensions in mm	Tapholes
A220 TX	500 × 500 × 100	
A220 HLW1,TX	500 × 500 × 100	o

Subject to alteration and production tolerance.

Dimensions

PG	article no.	dimensions in mm	Tapholes	weight (net)	White 000 → cover	coloured → cover
CO	A220 TX	500 × 500 × 100		4 kg	785 €	902 €
CO	A220 HLW1,TX	500 × 500 × 100	o	4 kg	785 €	902 €

Please note the ordering information on page 5.

Extras

PG	code	description	see	price
EX	PW	BetteGlaze® Plus for washbasin	p. 274	66 €
EX	HLZ	Tapholes and drilling as per special drawing	p. 276	234 €

Accessories

PG	article no.	description	see	price
IN	B580-901	Unslotted Waste 1¼ ", chrome	p. 362	74 €
IN	B580-000	Unslotted Waste 1¼ ", enamelled, White	p. 362	120 €
IN	B580-001	Unslotted Waste 1¼ ", enamelled, Pergamon	p. 362	120 €
IN	B580-002	Unslotted Waste 1¼ ", enamelled, Manhatten	p. 362	120 €
IN	B580-003	Unslotted Waste 1¼ ", enamelled, Bahama beige	p. 362	120 €
IN	B580-004	Unslotted Waste 1¼ ", enamelled, Edelweiss	p. 362	120 €
IN	B580-006	Unslotted Waste 1¼ ", enamelled, Jasmin	p. 362	120 €
IN	B580-035	Unslotted Waste 1¼ ", enamelled, Ebony	p. 362	120 €
IN	B580-056	Unslotted Waste 1¼ ", enamelled, Black	p. 362	120 €
IN	B580-400	Unslotted Waste 1¼ ", enamelled, Raven	p. 362	120 €
IN	B580-401	Unslotted Waste 1¼ ", enamelled, Anthracite	p. 362	120 €
IN	B580-402	Unslotted Waste 1¼ ", enamelled, Slate	p. 362	120 €
IN	B580-403	Unslotted Waste 1¼ ", enamelled, Smoke	p. 362	120 €
IN	B580-404	Unslotted Waste 1¼ ", enamelled, Graphite	p. 362	120 €
IN	B580-410	Unslotted Waste 1¼ ", enamelled, Silver	p. 362	120 €
IN	B580-412	Unslotted Waste 1¼ ", enamelled, Quartz	p. 362	120 €
IN	B580-413	Unslotted Waste 1¼ ", enamelled, Dust	p. 362	120 €
IN	B580-414	Unslotted Waste 1¼ ", enamelled, Flint	p. 362	120 €
IN	B580-415	Unslotted Waste 1¼ ", enamelled, Cashmere	p. 362	120 €
IN	B580-416	Unslotted Waste 1¼ ", enamelled, Stone	p. 362	120 €
IN	B580-417	Unslotted Waste 1¼ ", enamelled, Hazel	p. 362	120 €
IN	B580-422	Unslotted Waste 1¼ ", enamelled, Beige	p. 362	120 €
IN	B580-423	Unslotted Waste 1¼ ", enamelled, Flax	p. 362	120 €
IN	B580-424	Unslotted Waste 1¼ ", enamelled, Sand	p. 362	120 €
IN	B580-425	Unslotted Waste 1¼ ", enamelled, Greige	p. 362	120 €
IN	B580-430	Unslotted Waste 1¼ ", enamelled, Coffee	p. 362	120 €
IN	B580-434	Unslotted Waste 1¼ ", enamelled, Ebano	p. 362	120 €
IN	B580-438	Unslotted Waste 1¼ ", enamelled, Taupe	p. 362	120 €
IN	B580-439	Unslotted Waste 1¼ ", enamelled, Cacao	p. 362	120 €
IN	B580-440	Unslotted Waste 1¼ ", enamelled, Snow	p. 362	120 €
IN	B580-441	Unslotted Waste 1¼ ", enamelled, Cream	p. 362	120 €
IN	B580-418	Unslotted Waste 1¼ ", enamelled, Blue Satin	p. 362	120 €
IN	B580-790	Unslotted Waste 1¼ ", enamelled, Midnight	p. 362	120 €
IN	B580-788	Unslotted Waste 1¼ ", enamelled, Daylight	p. 362	120 €
IN	B580-791	Unslotted Waste 1¼ ", enamelled, Forest	p. 362	120 €

Upholstered Fabric-panel (required accessories)

PG	article no.	dimensions in mm	Ivory 850 Elephant 852 Carbon 853 → cover
IN	B805-	550 × 550 × 890	4.923 €

Technical information and prices of additional BetteExtras on page 270. You will find the colours in the cover. Subject to alteration and production tolerance. Prices excluding VAT.

BetteOne Built-In

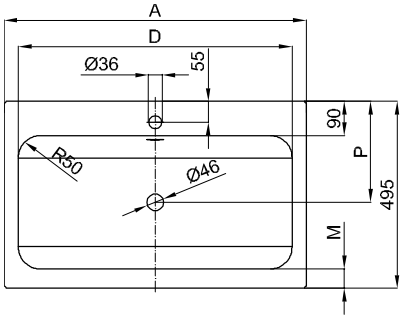

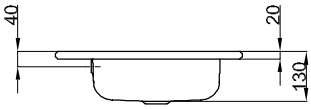

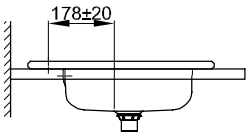

Recommended taps:

spout projection: ca. 178 mm from centre of taphole

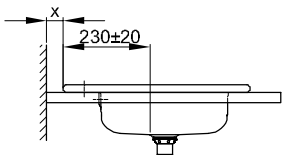

Recommended taps:

spout projection: distance to wall x mm + ca. 230 mm from outer edge

Download note

Template for cutout can be downloaded at www.my-bette.com

Scope of delivery

Including fixing material and overflow fitting as well as overflow rosette in chrome.

Including noise-reducing pads.

Design: Tesseraux + Partner

Dimensions

article no.	dimensions in mm	Tapholes	A	D	M	P
A138	600 × 495 × 130		600	544	40	273
A138 HLW1	600 × 495 × 130	o	600	544	40	273
A139	800 × 495 × 130		800	724	50	267
A139 HLW1	800 × 495 × 130	o	800	724	50	267

Subject to alteration and production tolerance.

Dimensions

PG	article no.	dimensions in mm	Tapholes	weight (net)	White 000 → cover	coloured → cover
CO	A138	600 × 495 × 130		8 kg	498 €	615 €
CO	A138 HLW1	600 × 495 × 130	o	8 kg	498 €	615 €
CO	A139	800 × 495 × 130		10.5 kg	520 €	637 €
CO	A139 HLW1	800 × 495 × 130	o	10.5 kg	520 €	637 €

Extras

PG	code	description	see	price
EX	PW	BetteGlaze® Plus for washbasin	p. 274	66 €
EX	HLZ	Tapholes and drilling as per special drawing	p. 276	234 €
EX	HLW3	Drilling for 3-hole-tap	p. 276	96 €

Accessories

PG	article no.	description	see	price
IN	B581-000	Pushwaste 1 ¼ ", White varnished	p. 364	122 €
IN	B581-901	Pushwaste 1 ¼ ", chrome	p. 364	95 €

Technical information and prices of additional BetteExtras on page 270. You will find the colours in the cover. Subject to alteration and production tolerance. Prices excluding VAT.

BetteOne Undermounted

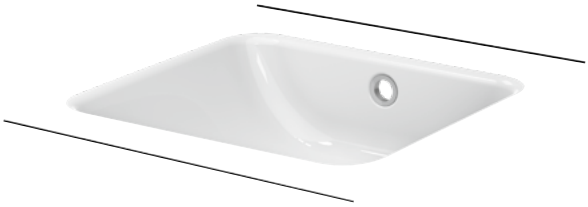

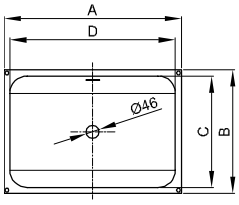

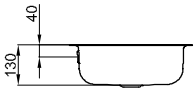

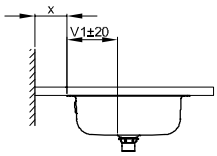

Recommended taps:

spout projection: distance to wall x mm + dimension V1 from outer edge

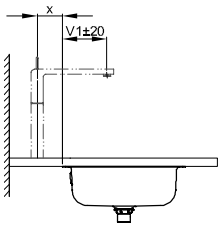

Recommended taps:

spout projection: distance tap x mm + dimension V1 from outer edge

Download note

Template for cutout can be downloaded at www.my-bette.com

Scope of delivery

Including noise-reducing pads.

Including overflow fitting as well as overflow rosette in chrome.

Design: Tesseraux + Partner

Dimensions

article no.	dimensions in mm	A	B	C	D	V1
A135	434 × 416 × 130	434	416	375	394	170
A136	587 × 408 × 130	587	408	368	547	165
A137	767 × 400 × 130	767	400	358	726	160

Subject to alteration and production tolerance.

Dimensions

PG	article no.	dimensions in mm	weight (net)	White 000 → cover	coloured → cover
CO	A135	434 × 416 × 130	4.4 kg	545 €	662 €
CO	A136	587 × 408 × 130	5.4 kg	573 €	690 €
CO	A137	767 × 400 × 130	7.4 kg	600 €	717 €

Please note the ordering information on page 5.

Extras

PG	code	description	see	price
EX	PW	BetteGlaze® Plus for washbasin	p. 274	66 €

Accessories

PG	article no.	description	see	price
IN	B581-000	Pushwaste 1 ¼ ", White varnished	p. 364	122 €
IN	B581-901	Pushwaste 1 ¼ ", chrome	p. 364	95 €

Technical information and prices of additional BetteExtras on page 270. You will find the colours in the cover. Subject to alteration and production tolerance. Prices excluding VAT.

Extras

275 Antinoise System
272 BetteAnti-Slip Pro
273 BetteAnti-Slip Sense
274 BetteGlaze® Plus
280 BetteUpstand
283 BetteUpstand installation aid
281 BetteUpstand ordering aid
282 BetteUpstand shortened
282 BetteUpstand tailor-made
276 Drillings
274 Individual laser logo
277 Minimum support
278 Minimum-support for BetteAir
288 Overview BetteUpstand, Special size, Profi Corner
304 Overview Extras
284 Profi Corner
285 Profi Corner ordering aid
274 Special depth
286 Special size

BetteAnti-Slip Pro

Information

- Virtually invisible, non-slip surface
- Full-surface and permanently burned into the surface
- Available for White (000), Pergamon (001), Manhattan (002), Bahama beige (003), Edelweiss (004), Jasmin (006), ebony (035), Curry (040), Carneol (096), Raven (400), Anthracite (401), Slate (402), Smoke (403), Graphite (404), Silver (410), Quartz (412), Dust (413), Flint (414), Cashmere (415), Stone (416), Hazel (417), Blue Satin (418), Beige (422), Flax (423), Sand (424), Greige (425), Coffee (430), Ebano (434), Taupe (438), Cacao (439), Snow (440), Cream (441)
- You will find all the combination options on our website and in our product configurator at www.my-bette.com.
- For shower areas BetteAir, BetteFloor, BetteFloor Side and shower trays BetteUltra, BetteSupra
- Not available with BetteGlaze® Plus

A waste cover with the BetteAnti-Slip Pro surface can be ordered for the shower waste.

Certification

In conjunction with our special BetteAntislip Pro, the BetteUltra 1500 × 1500 mm complies with the requirements of DIN 18040-1 barrier-free construction of publicly available buildings and DIN 18040-2 barrier-free construction of residences.

In conjunction with our special BetteAntislip Pro, the shower trays complies with the requirements of DIN 18040-2 barrier-free construction of residences: BetteUltra 1200 × 1200 mm, 1300 × 1300 mm, 1400 × 1400 mm, 1500 × 1500 mm.

In conjunction with our BetteAntislip Pro, the shower area complies with the requirements of DIN 18040-2 barrier-free construction of residences:
BetteFloor 1200 × 1200 mm
BetteFloor Side 1200 × 1200 mm, 1400 × 1200 mm, 1500 × 1200 mm, 1600 × 1200 mm

Variants

PG	code	description	suitable for	price
EX	AE	BetteAnti-Slip Pro	Shower areas, Shower trays, Shower tile	190 €
EX	AY	BetteAnti-Slip Pro for glazed waste cover	Shower areas, Shower trays, Shower tile	without surcharge

Not available with Glaze® Plus.

Subject to alteration and production tolerance.

BetteAnti-Slip Sense

Information

- Almost invisible surface treatment
- Clean, aesthetic surface
- Can be combined with White (000).
- Highest slip resistance: DIN 51097 class C (tested by TÜV Rheinland LGA Bautechnik GmbH, according to test certificate BTV 21V30174-01)
- Up to 26° inclination equivalence
- For all showers (shower trays, shower areas,shower tiles) and baths
- Easy to clean

A waste cover with the BetteAnti-Slip Sense surface can be ordered for the shower waste.

30
Years Warranty[*1]

Slip resistant
Rating group C
DIN 51097

*1 Further information on our guarantee terms at www.my-bette.com

Variants

PG	code	description	suitable for	price
EX	AS	BetteAnti-Slip Sense	Baths, Shower areas, Shower trays, Shower tile	190 €
EX	AX	BetteAnti-Slip Sense for glazed waste cover	Shower trays, Shower areas, Shower tile	without surcharge

Not available with Glaze® Plus.

Subject to alteration and production tolerance.

BetteGlaze® Plus

Information

The tried-and-tested enamel surface BetteGlaze® is available with BetteGlaze® Plus, a special polymer coating which has a water repellent effect to protect the bath surface from dirt and scale.

Cannot be combined with BetteAnti-Slip Pro (AE) and BetteAnti-Slip Sense (AS).

PG	code	suitable for	price
EX	PLUS	BetteGlaze® Plus	160 €
EX	PW	BetteGlaze® Plus for washbasin	66 €

Individual laser logo

Information

From a minimum order quantity of 50 pieces, many of our baths, showers and washbasins can be given an individual laser logo measuring up to 60 × 15 mm.

If required, please discuss the technical options and delivery times with us.

PG	code	suitable for	price
EX	Lo:	Individual laser logo	35 €

Special depth

Information

From a minimum order quantity of 50 pieces, we have the facility to produce certain baths and shower trays with special depths. Please contact us for more information.

PG	code	suitable for	price
EX	ST:	Special depth: ### mm	179 €

Subject to alteration and production tolerance.

Antinoise System

Information

Our products BetteBambino, BetteForm and the shower trays BetteQuinta and BetteDelta can be ordered with antinoise pads as an option.

PG	code	suitable for	price
EX	AD	Antinoise for baths	103 €
EX	ADD	Antinoise for shower trays	45 €

Subject to alteration and production tolerance.

Drillings

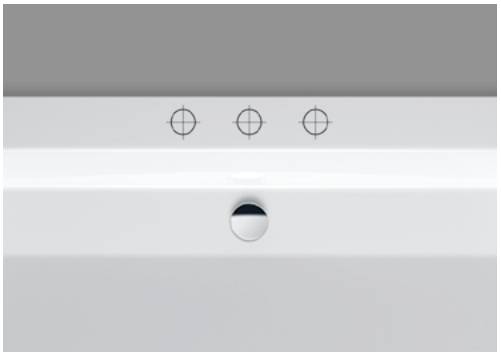

Drilling for 3-hole-tap

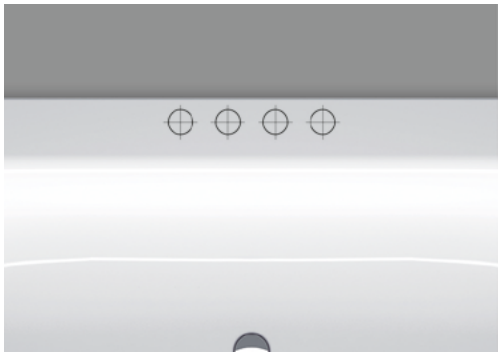

Tapholes and drilling as per special drawing

Information

For installation of fittings on the bath rim we can provide the bath with the necessary tapholes. After technical examination a drawing will be provided.

Variants

PG	code	description	suitable for	price
EX	HLW3	Drilling for 3-hole-tap	Washbasins	96 €
EX	HLZ	Tapholes and drilling as per special drawing	Baths, Washbasins	234 €

Subject to alteration and production tolerance.

Minimum tray support (pre-assembled at factory) for shower trays and shower areas

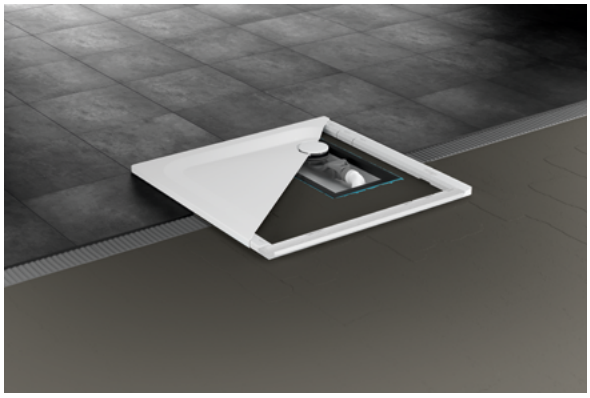

Information

- Pre-assembled at works
- Plug and play installation of shower trays and shower areas
- Can be glued directly to screed or wooden floor
- Can be combined with BetteFloor, BetteFloor Side, BetteUltra
- Combinable with sealing system
- Installation option: almost flush-to-floor
- Minimum Installation height from 35 mm

Variant

PG	code	description	suitable for	price
EX	T1	Minimum tray support (pre-assembled at factory) for shower trays and shower areas	Shower trays, Shower areas	79 €

Subject to alteration and production tolerance.

Minimum support (pre-assembled at factory) for shower tiles

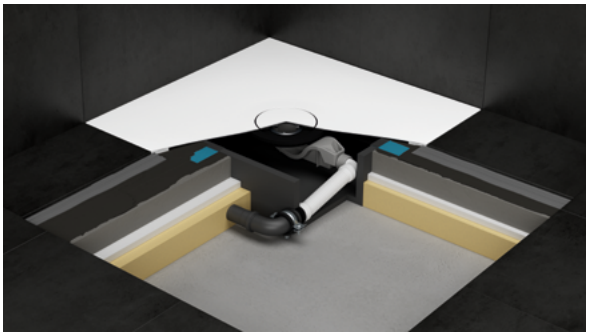

Information

- Pre-assembled at works
- Plug and play installation of the BetteAir shower tile
- Can be glued directly to screed or wooden floor
- Combinable with the BetteAir installation box
- Installation option: flush-to-floor

Minimal Installation height with
BetteAir 50 waste fitting: 68 mm
BetteAir 30 waste fitting: 48 mm

Variant

PG	code	description	suitable for	price
EX	T2	Minimum support (pre-assembled at factory) for shower tiles	Shower tiles	79 €

Subject to alteration and production tolerance.

Subject to alteration and production tolerance.

BetteUpstand

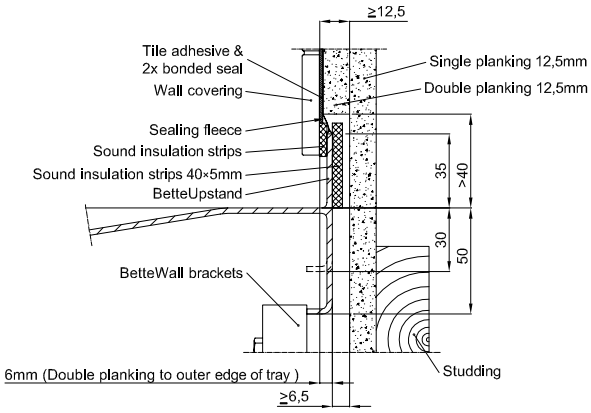

installation on dry wall

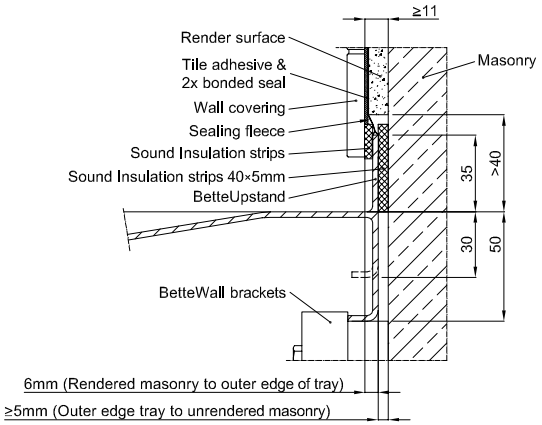

installation on solid wall

Information

We are able to deliver many of our baths, shower areas BetteFloor Side and shower trays with tiling upstands (height: 35 mm), either on one side (back to wall), on two sides (corner) or on three sides (niche).

A sealing fleece to protect against splashes is pre-fitted at the works.

You will find an overview of the models and dimensions that are available with BetteUpstand on pages 298/299.

All possible dimensions can be found on pages 288- 297.

The combination option of upstands and taphole drillings must be checked individually.

Showers with a side length of > 1200 mm and BetteFloor Side shower trays with a side length of ≥ 1200 mm are supplied with a rim height of 50 mm. The height of the upstand is unchanged at 35 mm.

We recommend the Basic or Foot-system for the installation of our shower trays and shower areas with BetteUpstand. The installation systems flush-to-floor and Universal cannot be used.

Sealing system B57-0080 for flush-to-floor installation to be ordered separately.

Scope of delivery

- Sound insulation strips
- Sealing fleece (pre-assembled at factory)

Certification

For standard sealing according to DIN 18534-1.

Waterproof
ETAG 022
DIN 18534

Noise level only
23dB(A) as per
DIN 4109
VDI 4100*2

*2 Structural conditions according to test certificate.

Variants

PG	description	suitable for	price
EX	BetteUpstand	Baths, Shower areas, Shower trays	424 €
EX	BetteUpstand tailor-made	Baths, Shower areas, Shower trays	592 €

Accessories

PG	article no.	description	price
IN	B57-0080	Sealing Set BetteUpstand installation flush-to-floor	107 €

Subject to alteration and production tolerance.

BetteUpstand ordering aid

Information

Shower trays with shank length > 1200 mm are supplied with 50 mm rim.
Shower areas BetteFloor Side with shank length ≥ 1200 mm are supplied with 50 mm rim.

Square shower trays with dimension < 1000 mm

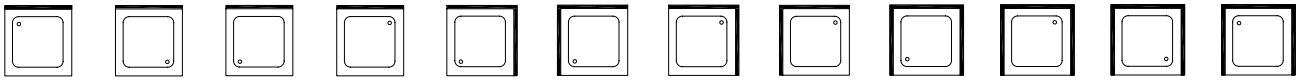

Z65 Z66 Z67 Z68 Z69 Z70 Z71 Z72 Z73 Z74 Z75 Z76

Rectangular shower trays with dimension < 1000 mm

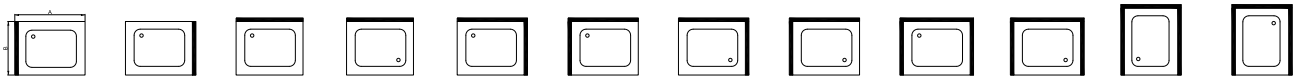

Z41 Z42 Z43 Z44 Z45 Z46 Z47 Z48 Z49 Z50 Z51 Z52

Rectangular and square shower trays with centre waste, with dimension ≥ 1000 mm < 1600 mm

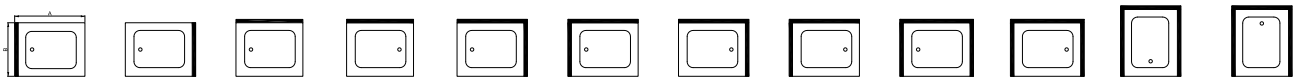

Z53 Z54 Z55 Z56 Z57 Z58 Z59 Z60 Z61 Z62 Z63 Z64

Rectangular and square shower trays with centre waste with dimension ≥ 1600 mm, BetteFloor Side (possible dimensions see pages 380 - 394)

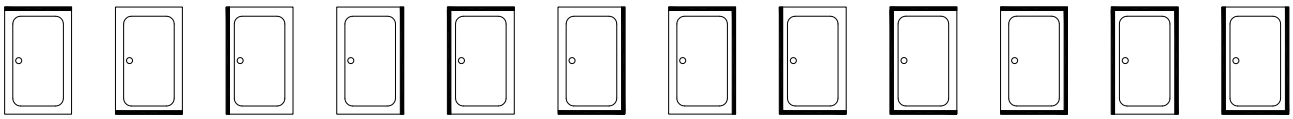

Z21 Z22 Z23 Z24 Z25 Z26 Z27 Z28 Z29 Z30 Z31 Z32

BetteCorner shower trays

Z81 Z82 Z83

BetteCaro shower trays

Z91 Z92 Z93

Bath with waste at the foot end

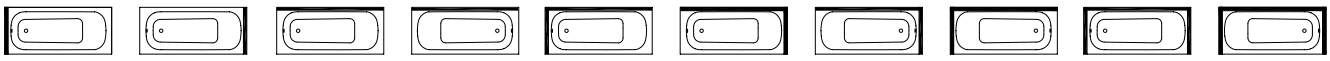

Z01 Z02 Z03 Z04 Z05 Z06 Z07 Z08 Z09 Z10

Bath with centre waste

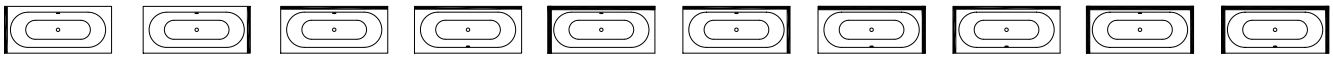

Z11 Z12 Z13 Z14 Z15 Z16 Z17 Z18 Z19 Z20

Bath with foot end right, overflow front (BetteComodo, BetteOcean, BetteSelect)

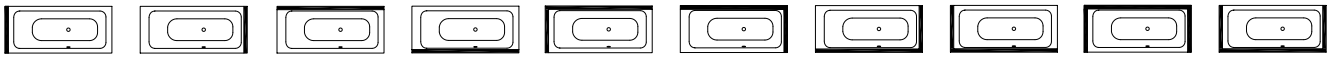

Z100 Z101 Z102 Z103 Z104 Z105 Z106 Z107 Z108 Z109

Bath with foot end right, oveflow rear (BetteComodo, BetteOcean, BetteSelect)

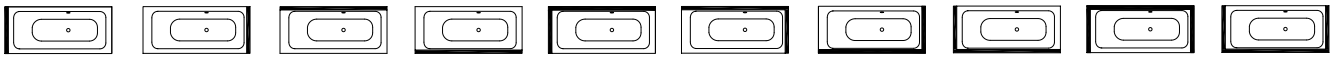

Z110 Z111 Z112 Z113 Z114 Z115 Z116 Z117 Z118 Z119

Subject to alteration and production tolerance.

BetteUpstand shortened

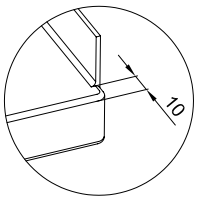

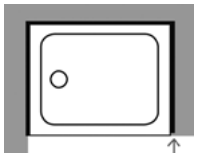

Y1, shortened Upstand right

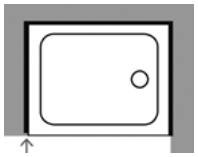

Y2, shortened Upstand left

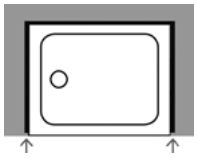

Y3, shortened Upstand both sides

Information

If a bath/tray with upstands is ordered for corner or niche installation where the wall is discontinued we recommend to have the upstand shortened by 10 mm. We offer this service without surcharge. Please mention the code as per your installation situation.

Variants

PG	code	description	suitable for	price
EX	Y1	shortened Upstand right	Baths, Shower trays, Shower areas	without surcharge
EX	Y2	shortened Upstand left	Baths, Shower areas, Shower trays	without surcharge
EX	Y3	shortened Upstand both sides	Baths, Shower trays, Shower areas	without surcharge

BetteUpstand tailor-made

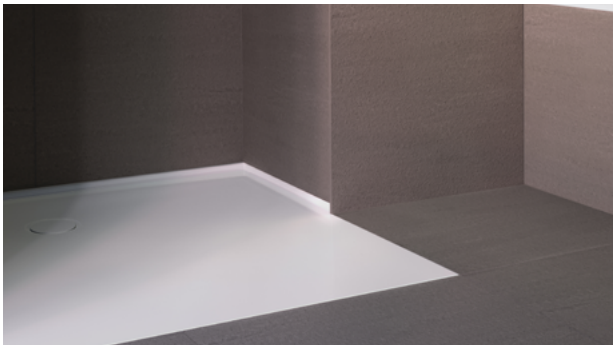

Information

A customized BetteUpstand solution is available on demand. We can adapt the length of the BetteUpstand to suit requirements. Please forward a drawing of the upstand location with your order.

Variant

PG	Description	suitable for	Price
EX	BetteUpstand tailor-made	Baths, Shower areas, Shower trays	592 €

Subject to alteration and production tolerance.

BetteUpstand installation aid

Information

As the shower tray with BetteUpstand is let into the wall, the tray installation dimension changes. Please bear this in mind when planning the shower screen. The dimensions specified relate to the renered rough state, without tiling.

niche installation

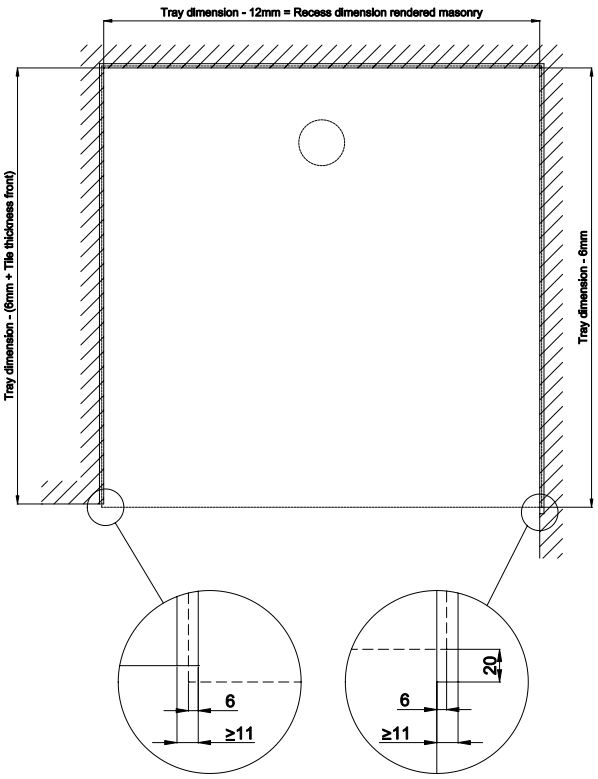

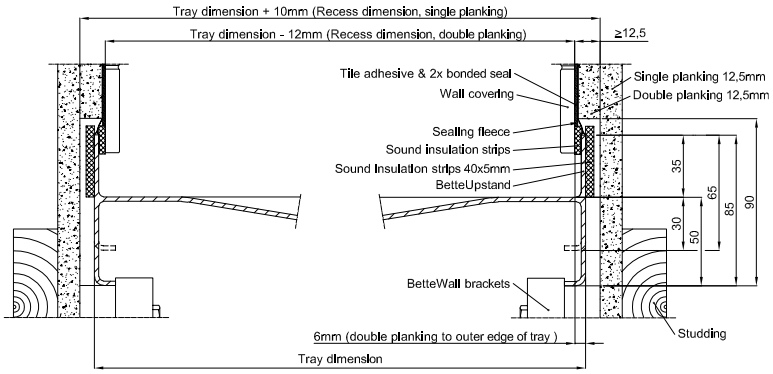

installation on dry wall

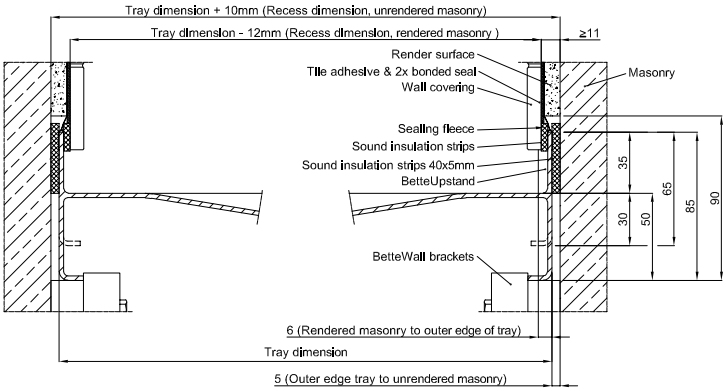

installation on solid wall

corner installation

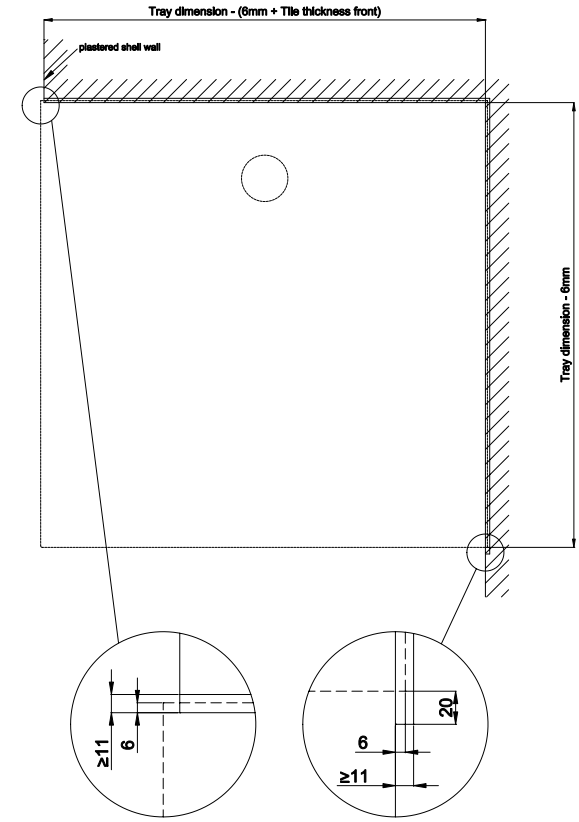

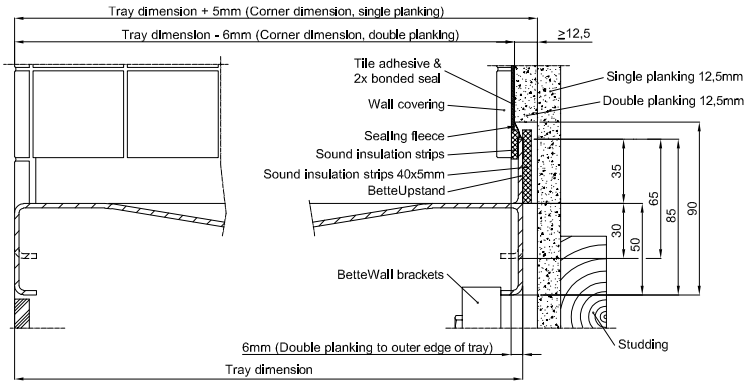

installation on dry wall

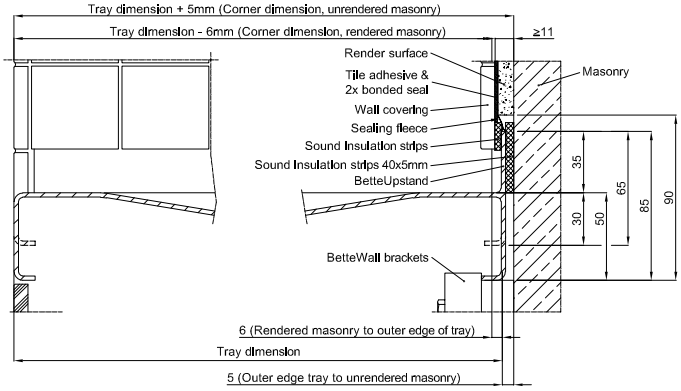

installation on solid wall

Subject to alteration and production tolerance.

Profi Corner

Information

Corner cuts to baths or shower trays may be used to offset pivot ranges of doors or downpipes.

Individual codes are available for ordering baths with corner cuts.

Please contact us if you wish to order shower trays with corner cuts.

With the BetteOcean and BetteOcean Lowline bath versions, the Profi corner of 150 x 150 mm is only possible at the head end.
Please contact us if you wish to have a Profi corner at the foot end.

Variants

PG	description	suitable for	price
EX	1 corner	Baths, Shower trays	404 €
EX	2 corners	Baths, Shower trays	694 €
EX	3 corners	Baths, Shower trays	982 €
EX	4 corners	Baths, Shower trays	1.274 €

Subject to alteration and production tolerance.

Profi Corner ordering aid

Bath with waste at the foot end

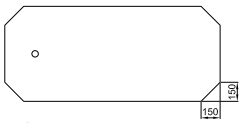

E79

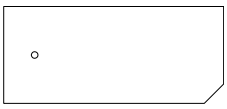
E80

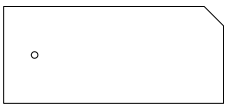
E81

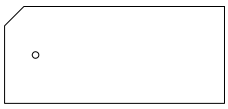
E82

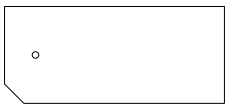
E83

E84

E85

E86

E87

E88

E89

E90

E91

E92

E93

Bath with centre waste

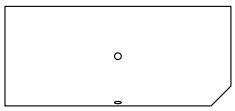
E94

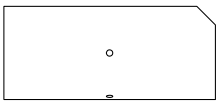
E95

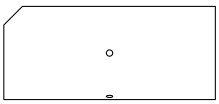
E96

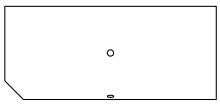
E97

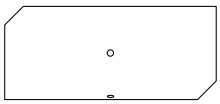
E98

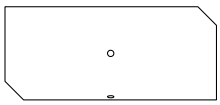
E99

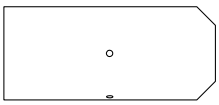
E100

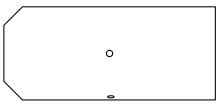
E101

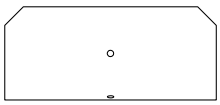
E102

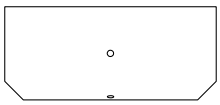
E103

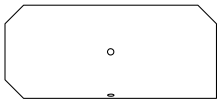
E104

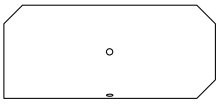
E105

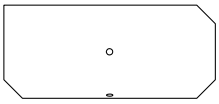
E106

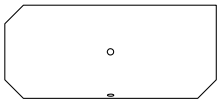
E107

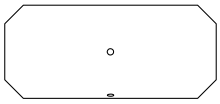
E108

Subject to alteration and production tolerance.

Special size

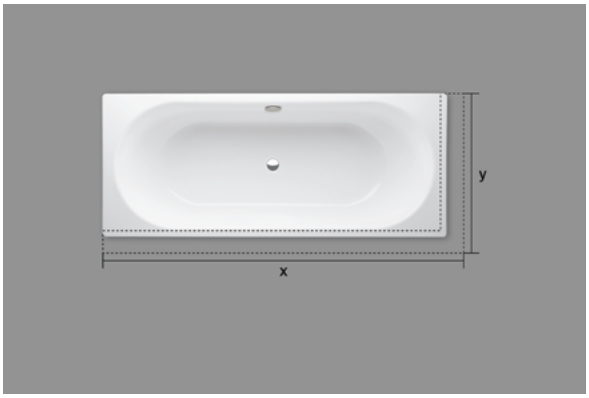

Information

Many baths and shower trays can be adapted to individual length and width. If using the minimum length for baths, arrangement of the tap holes at the foot end is no longer possible. The dimensions of the bath interior remain the same.

Please note that on shower trays with shank length > 1200 mm are supplied with a 50 mm rim (instead of 30 mm). In these cases, only the foot system or the Basic installation system can be used for the assembly.

The combination options of the whirlsystems need to be checked individually

Variants

PG	description	suitable for	price
EX	Special size	Baths, Shower trays	404 €
IN	Special size Foot-System	Shower trays	36 €

Subject to alteration and production tolerance.

Subject to alteration and production tolerance.

Special Size, BetteUpstand, Profi Corner Overview

Information

Many baths and shower trays can be adapted to individual length and width. If using the minimum length for baths, arrangement of the tap holes at the foot end is no longer possible. The dimensions of the bath interior remain the same.

Please note that on shower trays with shank length > 1200 mm are supplied with a 50 mm rim (instead of 30 mm). In these cases, only the foot system or the Basic installation system can be used for the assembly.

The combination options of the whirlsystems need to be checked individually

price

description	see	price
BetteUpstand	p. 280	from 424 €
Profi Corner	p. 284	from 404 €
Special size	p. 286	404 €
Special size Foot-System	p. 286	from 36 €

Overview

model	dimensions in mm	variant	article no.	max. length	min. length	max. width	min. width	BetteUpstand	Profi Corner
BetteArco	1400 × 1400 × 450		6035						
BetteArt	1805 × 755 × 420		3480 CFXXK						
BetteArt I	1805 × 800 × 420		3480 CWVHK						
BetteArt IV	1850 × 800 × 420		3480 CERHK						
BetteArt V	1850 × 800 × 420		3480 CELHK						
BetteBambino	1570 × 650 × 420	No. 1	2770						x
	1570 × 650 × 420	No. 2	2780						x
	1570 × 700 × 420	No. 1	2570						x
	1570 × 700 × 420	No. 2	2580						x
BetteClassic	1400 × 700 × 450		1266	1450	1400	750	700	x	x
	1500 × 700 × 450		1268	1550	1500	750	660	x	x
	1600 × 700 × 450		1267	1650	1600	750	700	x	x
	1600 × 750 × 450		1269	1650	1600	800	730	x	x
	1650 × 750 × 450		1265					x	x
	1700 × 700 × 450		3108	1750	1700	750	700	x	
	1700 × 730 × 450		3109					x	x
	1700 × 750 × 450		3110	1750	1700	800	730	x	x
	1700 × 800 × 450		3111	1750	1700	850	800	x	x
	1750 × 750 × 450		3112					x	x
	1800 × 700 × 450		1271	1850	1800	750	700	x	x
	1800 × 750 × 450		1272	1850	1800	750	700	x	x
	1800 × 800 × 450		1270	1850	1800	850	780	x	x
	1900 × 800 × 450		1273						x
BetteComodo	1700 × 750 × 450		1250	1750	1700	800	750	x	x
	1700 × 800 × 450		1253	1750	1700	800	750	x	x
	1800 × 800 × 450		1251	1850	1800	850	800	x	x
	1900 × 900 × 450		1252						x
BetteComodo with side overflow	1700 × 750 × 450	No. 1	1620	1750	1700	800	750	x	x
	1700 × 750 × 450	No. 2	1640	1750	1700	800	750	x	x
	1700 × 800 × 450	No. 1	1623	1750	1700	800	750	x	x
	1700 × 800 × 450	No. 2	1643	1750	1700	800	750	x	x
	1800 × 800 × 450	No. 1	1621	1850	1800	850	800	x	x
	1800 × 800 × 450	No. 2	1641	1850	1800	850	800	x	x
	1900 × 900 × 450	No. 1	1622						x
	1900 × 900 × 450	No. 2	1642						x
BetteDuett	1700 × 750 × 420		3020	1750	1650	800	750	x	x
	1700 × 800 × 420		3100	1750	1650	800	750	x	x
BetteDuo	1800 × 800 × 420		3820	1850	1750	850	800	x	x
BetteEve	1800 × 1000 × 450		6042					x	x
BetteEve Oval	1800 × 1000 × 450		6043						
BetteEve Oval Silhouette	1800 × 1000 × 450		6043 CFXXS						

Subject to alteration and production tolerance.

model	dimensions in mm	variant	article no.	max. length	min. length	max. width	min. width	BetteUpstand	Profi Corner
BetteForm	1400 × 700 × 420		2940	1450	1350	750	700	x	x
	1500 × 700 × 420		2941	1550	1450	750	700	x	x
	1600 × 700 × 420		2942	1650	1550	750	700	x	x
	1600 × 750 × 420		2943	1650	1550	800	730	x	x
	1650 × 750 × 420		2944					x	x
	1700 × 700 × 420		2945	1750	1650	750	700	x	x
	1700 × 730 × 420		2946					x	x
	1700 × 750 × 420		2947	1750	1650	800	730	x	x
	1700 × 800 × 420		2948					x	x
	1750 × 750 × 420		2949					x	x
	1800 × 800 × 420		2950	1850	1750	850	780	x	x
	1900 × 800 × 420		2951						x
BetteFree	1700 × 750 × 450		6829						
	1800 × 800 × 450		6830						
	1900 × 900 × 450		6831						
	2000 × 1000 × 450		6832						
BetteLoft	1700 × 800 × 420		3171						
	1800 × 800 × 420		3172						
	1900 × 900 × 420		3173						
BetteLoft Ornament	1810 × 810 × 420		3172 CFXX6A						
BetteLuna	1700 × 750 × 450	No. 1	2750						x
	1700 × 750 × 450	No. 2	2760						x
BetteLux	1700 × 750 × 450		3440						
	1800 × 800 × 450		3441						
	1900 × 900 × 450		3442						
BetteLux Oval	1700 × 750 × 450		3465						
	1800 × 800 × 450		3466						
	1900 × 900 × 450		3467						
BetteLux Oval Couture	1800 × 800 × 450		3466 TX						
BetteLux Oval Highline	1800 × 800 × 450		3466 CFXXH						
	1900 × 900 × 450		3467 CFXXH						
BetteLux Oval Silhouette	1700 × 750 × 450		3465 CFXXS						
	1800 × 800 × 450		3466 CFXXS						
	1900 × 900 × 450		3467 CFXXS						
BetteLux Oval I Silhouette	1700 × 800 × 450		3415 CWVVS						
	1800 × 850 × 450		3416 CWVVS						
	1900 × 950 × 450		3417 CWVVS						
BetteLux Oval IV Silhouette	1750 × 800 × 450		3425 CERVS						
	1850 × 850 × 450		3426 CERVS						
	1950 × 950 × 450		3427 CERVS						
BetteLux Oval V Silhouette	1750 × 800 × 450		3435 CELVS						
	1850 × 850 × 450		3436 CELVS						
	1950 × 950 × 450		3437 CELVS						
BetteLux Shape	1700 × 750 × 450		3451						
	1800 × 800 × 450		3452						
	1900 × 900 × 450		3453						
BetteLux Silhouette	1700 × 750 × 450		3440 CFXXS						
	1800 × 800 × 450		3441 CFXXS						
BetteLux Silhouette Side	1700 × 850 × 450		3460 CFXVS						
	1800 × 900 × 450		3461 CFXVS						
BetteLux I Silhouette Side	1700 × 850 × 450		3460 CWVVS						
	1800 × 900 × 450		3461 CWVVS						
BetteLux IV Silhouette Side	1700 × 850 × 450		3460 CERVS						
	1800 × 900 × 450		3461 CERVS						
BetteLux V Silhouette Side	1700 × 850 × 450		3460 CELVS						
	1800 × 900 × 450		3461 CELVS						
BetteMetric	2060 × 900 × 450	No. 1	6840						
	2060 × 900 × 450	No. 2	6841						
BetteOcean	1500 × 700 × 450	No. 1	8858	1550	1500	750	700	x	x
	1500 × 700 × 450	No. 2	8859	1550	1500	750	700	x	x
	1600 × 700 × 450	No. 1	8850	1650	1600	750	700	x	x
	1600 × 700 × 450	No. 2	8851	1650	1600	750	700	x	x
	1700 × 700 × 450	No. 1	8852	1750	1700	750	700	x	x
	1700 × 700 × 450	No. 2	8853	1750	1700	750	700	x	x
	1700 × 750 × 450	No. 1	8854	1750	1700	800	750	x	x
	1700 × 750 × 450	No. 2	8855	1750	1700	800	750	x	x
	1700 × 800 × 450	No. 1	8765	1750	1700	850	800	x	x
	1700 × 800 × 450	No. 2	8865	1750	1700	850	800	x	x
	1800 × 800 × 450	No. 1	8856	1850	1800	850	800	x	x

Subject to alteration and production tolerance.

Special Size, BetteUpstand, Profi Corner Overview

Information

Many baths and shower trays can be adapted to individual length and width. If using the minimum length for baths, arrangement of the tap holes at the foot end is no longer possible. The dimensions of the bath interior remain the same.

Please note that on shower trays with shank length > 1200 mm are supplied with a 50 mm rim (instead of 30 mm). In these cases, only the foot system or the Basic installation system can be used for the assembly.

The combination options of the whirlsystems need to be checked individually

price

description	see	price
BetteUpstand	p. 280	from 424 €
Profi Corner	p. 284	from 404 €
Special size	p. 286	404 €
Special size Foot-System	p. 286	from 36 €

Overview

model	dimensions in mm	variant	article no.	max. length	min. length	max. width	min. width	BetteUpstand	Profi Corner
BetteOcean	1800 × 800 × 450	No. 2	8857	1850	1800	850	800	x	x
BetteOcean Low-Line	1500 × 700 × 380	No. 1	8841	1550	1500	750	700	x	x
	1500 × 700 × 380	No. 2	8842	1550	1500	750	700	x	x
	1600 × 700 × 380	No. 1	8830	1650	1600	750	700	x	x
	1600 × 700 × 380	No. 2	8831	1650	1600	750	700	x	x
	1700 × 700 × 380	No. 1	8832	1750	1700	750	700	x	x
	1700 × 700 × 380	No. 2	8833	1750	1700	750	700	x	x
	1700 × 750 × 380	No. 1	8834	1750	1700	800	750	x	x
	1700 × 750 × 380	No. 2	8835	1750	1700	800	750	x	x
	1700 × 800 × 380	No. 1	8836	1750	1700	850	800	x	x
	1700 × 800 × 380	No. 2	8837	1750	1700	850	800	x	x
	1800 × 800 × 380	No. 1	8838	1850	1800	850	800	x	x
	1800 × 800 × 380	No. 2	8839	1850	1800	850	800	x	x
BetteOne	1600 × 700 × 420		3310	1650	1520	750	650	x	x
	1700 × 700 × 420		3311	1750	1650	750	650	x	x
	1700 × 750 × 420		3312	1750	1620	800	670	x	x
	1800 × 800 × 420		3313	1850	1720	850	710	x	x
	1900 × 900 × 420		3314						x
BetteOne Relax	1800 × 800 × 450		3323	1850	1700	850	700	x	x
	1900 × 900 × 450		3324						x
	2000 × 900 × 450		3325						x
BettePond	1500 × 1500 × 450		6045						
BettePond Silhouette	1500 × 1500 × 450		6045 CFXXS						
BettePool I	1605 × 1022 × 450	No. 1	6052						
	1605 × 1022 × 450	No. 2	6053						
BettePool I Panel	1605 × 1022 × 450	No. 1	6052 CERV						
	1605 × 1022 × 450	No. 2	6053 CELV						
BettePool III	1598 × 1130 × 450	No. 1	6056						
	1598 × 1130 × 450	No. 2	6057						
BettePool III Panel Corner Installation	1598 × 1130 × 450	No. 1	6056 CCVV						
	1598 × 1130 × 450	No. 2	6057 CCVV						
BettePool Oval	1641 × 960 × 450		6050						
BetteSelect	1600 × 700 × 420		3410	1650	1550	750	685	x	x
	1700 × 700 × 420		3411	1750	1650	750	685	x	x
	1700 × 750 × 420		3412	1750	1650	800	735	x	x
	1800 × 800 × 420		3413	1850	1750	850	785	x	x
BetteSelect Duo	1700 × 750 × 420		3472	1750	1700	800	720	x	x
	1800 × 800 × 420		3473	1850	1800	850	770	x	x
BetteSelect with side overflow	1600 × 700 × 420	No. 1	3420	1650	1550	750	685	x	x
	1600 × 700 × 420	No. 2	3430	1650	1550	750	685	x	x
	1700 × 700 × 420	No. 1	3421	1750	1650	750	685	x	x

Subject to alteration and production tolerance.

model	dimensions in mm	variant	article no.	max. length	min. length	max. width	min. width	BetteUpstand	Profi Corner
BetteSelect with side overflow	1700 × 700 × 420	No. 2	3431	1750	1650	750	685	x	x
	1700 × 750 × 420	No. 1	3422	1750	1650	800	735	x	x
	1700 × 750 × 420	No. 2	3432	1750	1650	800	735	x	x
	1800 × 800 × 420	No. 1	3423	1850	1750	850	785	x	x
	1800 × 800 × 420	No. 2	3433	1850	1750	850	785	x	x
BetteSet	1500 × 750 × 380		2560	1550	1450	800	750	x	x
	1600 × 700 × 380		3650	1650	1550	750	700	x	x
	1600 × 750 × 380		3660	1650	1550	800	750	x	x
	1650 × 750 × 380		3560					x	x
	1700 × 750 × 380		3060	1750	1650	800	750	x	x
	1700 × 800 × 380		3760	1750	1700	850	800	x	x
	1800 × 800 × 380		3860	1850	1750	800	800	x	x
BetteSpace L	1700 × 1300 × 420	No. 1	1132					x	
	1700 × 1300 × 420	No. 2	1142					x	
BetteSpace M	1700 × 900 × 420	No. 1	1131					x	
	1700 × 900 × 420	No. 2	1141					x	
BetteSpace S	1700 × 750 × 420	No. 1	1130					x	
	1700 × 750 × 420	No. 2	1140					x	
BetteStarlet	1500 × 800 × 420		1210					x	x
	1570 × 700 × 420		2590					x	x
	1600 × 650 × 420		2540	1650	1550	750	650	x	x
	1600 × 700 × 420		1220	1650	1550	750	650	x	x
	1650 × 700 × 420		1230					x	x
	1700 × 700 × 420		1730	1750	1650	800	700	x	x
	1700 × 750 × 420		1380	1750	1650	800	700	x	x
	1750 × 800 × 420		1450	1750	1650	800	700	x	x
	1800 × 750 × 420		1430	1850	1750	800	750	x	x
	1800 × 800 × 420		1630	1850	1750	850	750	x	x
	1850 × 850 × 420		1631	1850	1750	850	750	x	x
	1900 × 900 × 420		1830	1950	1850	950	850		x
BetteStarlet I	1650 × 750 × 420		8300						x
	1750 × 800 × 420		8310						x
	1850 × 850 × 420		8320						x
BetteStarlet I Silhouette	1650 × 750 × 420		8300 CWVVK						
	1750 × 800 × 420		8310 CWVVK						
	1850 × 850 × 420		8320 CWVVK						
	1950 × 950 × 420		8325 CWVVK						
BetteStarlet II	1650 × 750 × 420		8330						x
	1750 × 800 × 420		8340						x
	1850 × 850 × 420		8350						x
BetteStarlet IV	1650 × 750 × 420		6650						x
	1750 × 800 × 420		6660						x
	1850 × 850 × 420		6670						x
BetteStarlet IV Silhouette	1650 × 750 × 420		6650 CERVK						
	1750 × 800 × 420		6660 CERVK						
	1850 × 850 × 420		6670 CERVK						
	1950 × 950 × 420		6677 CERVK						
BetteStarlet V	1650 × 750 × 420		6680						x
	1750 × 800 × 420		6690						x
	1850 × 850 × 420		6700						x
BetteStarlet V Silhouette	1650 × 750 × 420		6680 CELVK						
	1750 × 800 × 420		6690 CELVK						
	1850 × 850 × 420		6700 CELVK						
	1950 × 950 × 420		6720 CELVK						
BetteStarlet Hexa	1880 × 700 × 420		2040						
	2000 × 750 × 420		2060						
	2100 × 800 × 420		2080						
BetteStarlet Flair Oval	1580 × 680 × 420		8772						
	1680 × 730 × 420		8773						
	1780 × 780 × 420		8774						
	1880 × 880 × 420		8775						
BetteStarlet Oval	1500 × 800 × 420		2700						
	1650 × 750 × 420		2720						
	1750 × 800 × 420		2680						
	1850 × 850 × 420		2740						
	1950 × 950 × 420		2745						
BetteStarlet Oval Silhouette	1500 × 800 × 420		2700 CFXXK						
	1650 × 750 × 420		2720 CFXXK						
	1750 × 800 × 420		2680 CFXXK						

Subject to alteration and production tolerance.

Special Size, BetteUpstand, Profi Corner Overview

Information

Many baths and shower trays can be adapted to individual length and width. If using the minimum length for baths, arrangement of the tap holes at the foot end is no longer possible. The dimensions of the bath interior remain the same.

Please note that on shower trays with shank length > 1200 mm are supplied with a 50 mm rim (instead of 30 mm). In these cases, only the foot system or the Basic installation system can be used for the assembly.

The combination options of the whirlsystems need to be checked individually

price

description	see	price
BetteUpstand	p. 280	from 424 €
Profi Corner	p. 284	from 404 €
Special size	p. 286	404 €
Special size Foot-System	p. 286	from 36 €

Overview

model	dimensions in mm	variant	article no.	max. length	min. length	max. width	min. width	BetteUpstand	Profi Corner
BetteStarlet Oval Silhouette	1850 × 850 × 420		2740 CFXXK						
	1950 × 950 × 420		2745 CFXXK						
BetteStarlet Spirit	1700 × 750 × 420		1384						
	1800 × 800 × 420		1634						
BetteStep	1050 × 650 × 420		1050	1100	1050	700	650	x	x
	1180 × 730 × 420		1060	1230	1180	780	730	x	x
LaBette	1080 × 730 × 380		1080	1130	1080	780	730	x	x
	1180 × 730 × 380		1180	1230	1130	780	730	x	x
	1200 × 700 × 390		1200	1250	1200	750	700	x	x
	1240 × 700 × 420		1240	1290	1190	750	700	x	x
	1300 × 700 × 390		1300	1350	1300	750	700	x	x
BetteAir	900 × 900		7350						
	1000 × 900		7351						
	1000 × 1000		7352						
	1100 × 900		7359						
	1100 × 1000		7360						
	1200 x 800		7353						
	1200 × 900		7354						
	1200 × 1000		7355						
	1200 × 1200		7361						
	1400 × 900		7356						
	1400 × 1000		7357						
	1500 × 900		7362						
	1500 × 1000		7363						
	1600 × 900		7364						
	1600 × 1000		7365						
BetteFloor	800 × 800		5831						
	900 × 700		5711						
	900 × 750		5841						
	900 × 800		8751						
	900 × 900		5931						
	1000 × 700		5881						
	1000 × 750		1651						
	1000 × 800		5491						
	1000 × 900		1661						
	1000 × 1000		5941						
	1100 × 750		8732						
	1100 × 800		8731						
	1100 × 900		8631						
	1100 × 1000		8735						
	1200 × 700		1672						
	1200 × 750		1671						

Subject to alteration and production tolerance.

model	dimensions in mm	variant	article no.	max. length	min. length	max. width	min. width	BetteUpstand	Profi Corner
BetteFloor	1200 × 800		1681						
	1200 × 900		1261						
	1200 × 1000		8661						
	1200 × 1200		8721						
	1300 × 750		5797						
	1300 × 800		5793						
	1300 × 900		5791						
	1300 × 1000		5794						
	1400 × 700		5803						
	1400 × 750		5802						
	1400 × 800		5801						
	1400 × 900		5836						
	1400 × 1000		5851						
	1500 × 700		5938						
	1500 × 750		5939						
	1500 × 800		5937						
	1500 × 900		5936						
	1500 × 1000		5946						
	1600 × 700		5948						
	1600 × 750		5949						
	1600 × 800		5957						
	1600 × 900		5966						
	1600 × 1000		5969						
	1700 × 750		5994						
	1700 × 800		5989						
	1700 × 900		5991						
	1700 × 1000		5817						
	1800 × 800		5981						
	1800 × 900		5988						
	1800 × 1000		5818						
BetteFloor Side	900 × 900		3381					x	
	1000 × 800		3388					x	
	1000 × 900		3385					x	
	1000 × 1000		3382					x	
	1100 × 800		3374					x	
	1100 × 900		3396					x	
	1200 × 800		3387					x	
	1200 × 900		3380					x	
	1200 × 1000		3383					x	
	1200 × 1200		3391					x	
	1300 × 900		3398					x	
	1300 × 1000		3399					x	
	1400 × 800		3379					x	
	1400 × 900		3384					x	
	1400 × 1000		3386					x	
	1400 × 1200		3394						
	1500 × 900		3393					x	
	1500 × 1000		3389					x	
	1500 × 1200		3395						
	1600 × 800		3375					x	
	1600 × 900		3390					x	
	1600 × 1000		3397					x	
	1600 × 1200		3392						
	1700 × 900		3376					x	
	1800 × 900		3377						
	1800 × 1000		3378						
BetteFlat	1200 × 1200		3372 AE						
BetteFloor Caro	900 × 900		7191						
	1000 × 1000		7211						
BetteFloor Corner	900 × 900		5421						
	1000 × 1000		5451						
BetteUltra 700-900 mm	700 × 700		5719	750	650	750	650	x	x
	750 × 750		5529	800	700	800	700	x	x
	800 × 700		5679	850	750	750	650	x	x
	800 × 750		5669	850	750	800	700	x	x
	800 × 800		5830	850	750	850	750	x	x
	850 × 850		1589					x	x
	900 × 600		8600	950	850	650	550	x	x
	900 × 700		5709	950	850	750	650	x	x

Subject to alteration and production tolerance.

Special Size, BetteUpstand, Profi Corner Overview

Information

Many baths and shower trays can be adapted to individual length and width. If using the minimum length for baths, arrangement of the tap holes at the foot end is no longer possible. The dimensions of the bath interior remain the same.

Please note that on shower trays with shank length > 1200 mm are supplied with a 50 mm rim (instead of 30 mm). In these cases, only the foot system or the Basic installation system can be used for the assembly.

The combination options of the whirlsystems need to be checked individually

price

description	see	price
BetteUpstand	p. 280	from 424 €
Profi Corner	p. 284	from 404 €
Special size	p. 286	404 €
Special size Foot-System	p. 286	from 36 €

Overview

model	dimensions in mm	variant	article no.	max. length	min. length	max. width	min. width	BetteUpstand	Profi Corner
BetteUltra 700-900 mm	900 × 750		5840	950	850	800	700	x	x
	900 × 800		8750	950	850	850	750	x	x
	900 × 850		1559					x	x
	900 × 900		5930	950	850	950	850	x	x
BetteUltra 1000 mm	1000 × 700		5879	1050	950	750	650	x	x
	1000 × 750		1650	1050	950	800	700	x	x
	1000 × 800		5490	1050	950	850	750	x	x
	1000 × 900		1660	1050	950	950	850	x	x
	1000 × 1000		5940	1050	950	1050	950	x	x
BetteUltra 1050-1500 mm	1050 × 750 × 35		8710					x	x
	1100 × 700 × 35		8725	1150	1050	750	650	x	x
	1100 × 750 × 35		8727	1150	1050	800	700	x	x
	1100 × 800 × 35		8729	1100	1050	850	750	x	x
	1100 × 900 × 35		8630	1150	1050	950	850	x	x
	1100 × 1000 × 35		8737	1150	1050	1050	950	x	x
	1100 × 1100 × 35		8743	1150	1050	1150	1050	x	x
	1200 × 700 × 35		5979	1250	1150	750	650	x	x
	1200 × 750 × 35		1670	1250	1150	800	700	x	x
	1200 × 800 × 35		1680	1250	1150	850	750	x	x
	1200 × 900 × 35		1260	1250	1150	950	850	x	x
	1200 × 1000 × 35		8660	1250	1150	1050	950	x	x
	1200 × 1100 × 35		8664	1250	1150	1150	1050	x	x
	1200 × 1200 × 35		8720	1250	1150	1250	1150	x	x
	1300 × 700 × 35		5784	1350	1270	750	670	x	x
	1300 × 750 × 35		5785	1350	1270	750	670	x	x
	1300 × 800 × 35		5786	1350	1250	850	750	x	x
	1300 × 900 × 35		5795	1350	1250	950	850	x	x
	1300 × 1000 × 35		5788	1350	1250	1050	950	x	x
	1300 × 1300 × 35		5826	1350	1250	1350	1250	x	
	1400 × 700 × 35		5824	1450	1350	750	650	x	x
	1400 × 750 × 35		5814					x	x
	1400 × 800 × 35		5804	1450	1350	850	750	x	x
	1400 × 900 × 35		5834	1450	1350	950	850	x	x
	1400 × 1000 × 35		5838	1450	1350	1050	950	x	x
	1400 × 1400 × 35		5828	1450	1350	1450	1350	x	
	1500 × 700 × 35		5914	1550	1450	750	650	x	x
	1500 × 750 × 35		5924					x	x
	1500 × 800 × 35		5932	1550	1450	850	750	x	x
	1500 × 900 × 35		5934	1550	1450	950	850	x	x
	1500 × 1000 × 35		5944	1550	1450	1050	950	x	x
	1500 × 1500 × 35		5984						x

Subject to alteration and production tolerance.

model	dimensions in mm	variant	article no.	max. length	min. length	max. width	min. width	BetteUpstand	Profi Corner
BetteUltra 1600-2000 mm	1600 × 700 × 35		5951	1650	1550	750	650	x	x
	1600 × 750 × 35		5953	1650	1550	800	700	x	x
	1600 × 800 × 35		5955	1650	1550	850	750	x	x
	1600 × 900 × 35		5961	1650	1550	950	850	x	x
	1600 × 1000 × 35		5967	1650	1550	1050	950	x	x
	1700 × 700 × 35		5992	1750	1650	750	650	x	x
	1700 × 750 × 35		5996	1750	1700	800	750	x	x
	1700 × 800 × 35		5971	1750	1650	850	750	x	x
	1700 × 900 × 35		5998	1750	1650	950	850	x	x
	1700 × 1000 × 35		5806	1750	1650	1050	950	x	x
	1800 × 800 × 35		5986	1850	1750	850	750	x	x
	1800 × 900 × 35		5982	1850	1750	950	850	x	x
	1800 × 1000 × 35		5808	1850	1750	1050	950	x	x
	1900 × 900 × 35		5973	1900	1850	950	850	x	x
	2000 × 900 × 35		5974	2000	1950	950	850	x	x
BetteUltra with polystyrene support	800 × 800		5830 T					x	
	900 × 700		5709 T					x	
	900 × 750		5840 T					x	
	900 × 800		8750 T					x	
	900 × 900		5930 T					x	
	1000 × 700		5879 T					x	
	1000 × 750		1650 T					x	
	1000 × 800		5490 T					x	
	1000 × 1000		5940 T					x	
	1100 × 800 × 35		8729 T	1100	1050	850	750	x	
	1100 × 900 × 35		8630 T					x	
	1200 × 750 × 35		1670 T					x	
	1200 × 800 × 35		1680 T					x	
	1200 × 900 × 35		1260 T					x	
	1200 × 1000 × 35		8660 T					x	
	1400 × 800 × 35		5804 T						
	1400 × 900 × 35		5834 T						
	1500 × 900 × 35		5934 T						
BetteSupra 700-900 mm	700 × 700 × 65		5720	750	670	750	670	x	x
	750 × 700 × 65		5360					x	x
	750 × 750 × 65		5530	800	720	800	720	x	x
	800 × 700 × 65		5680	850	770	750	670	x	x
	800 × 750 × 65		5670	850	770	800	720	x	x
	800 × 800 × 65		5820	850	770	850	770	x	x
	850 × 700 × 65		5780					x	x
	850 × 750 × 65		1570					x	x
	850 × 850 × 65		1590					x	x
	900 × 600 × 65		8610	950	870	650	570	x	x
	900 × 700 × 65		5710	950	870	750	670	x	x
	900 × 750 × 65		5770	950	870	800	720	x	x
	900 × 800 × 65		5970	950	870	850	770	x	x
	900 × 850 × 65		1560					x	x
	900 × 900 × 65		5920	950	870	950	870	x	x
BetteSupra 1000-1500 mm	1000 × 700 × 65		5880	1050	970	750	670	x	x
	1000 × 750 × 65		5550	1050	970	800	720	x	x
	1000 × 800 × 65		5520	1050	970	850	770	x	x
	1000 × 900 × 65		5380	1050	970	950	870	x	x
	1000 × 1000 × 65		5620	1050	970	1050	970	x	x
	1050 × 750 × 65		8690					x	x
	1100 × 700 × 65		8726	1150	1070	750	670	x	x
	1100 × 750 × 65		8728	1150	1070	800	720	x	x
	1100 × 800 × 65		8730					x	x
	1100 × 900 × 65		8640	1150	1070	950	870	x	x
	1100 × 1000 × 65		8738	1150	1070	1050	970	x	x
	1100 × 1100 × 65		8744	1150	1070	1150	1070	x	x
	1200 × 700 × 65		5980	1250	1170	750	670	x	x
	1200 × 750 × 65		5570	1250	1170	800	720	x	x
	1200 × 800 × 65		5870	1250	1170	850	770	x	x
	1200 × 900 × 65		1690	1250	1170	950	870	x	x
	1200 × 1000 × 65		8670	1250	1170	1050	970	x	x
	1200 × 1100 × 65		8665	1250	1170	1150	1070	x	x
	1200 × 1200 × 65		5630	1250	1170	1250	1170	x	x
	1300 × 800 × 65		5787	1350	1270	850	770	x	x
	1300 × 900 × 65		5796	1350	1270	950	870	x	x

Subject to alteration and production tolerance.

Special Size, BetteUpstand, Profi Corner Overview

Information

Many baths and shower trays can be adapted to individual length and width. If using the minimum length for baths, arrangement of the tap holes at the foot end is no longer possible. The dimensions of the bath interior remain the same.

Please note that on shower trays with shank length > 1200 mm are supplied with a 50 mm rim (instead of 30 mm). In these cases, only the foot system or the Basic installation system can be used for the assembly.

The combination options of the whirlsystems need to be checked individually

price

description	see	price
BetteUpstand	p. 280	from 424 €
Profi Corner	p. 284	from 404 €
Special size	p. 286	404 €
Special size Foot-System	p. 286	from 36 €

Overview

model	dimensions in mm	variant	article no.	max. length	min. length	max. width	min. width	BetteUpstand	Profi Corner
BetteSupra 1000-1500 mm	1300 × 1000 × 65		5789	1350	1270	1050	970	x	x
	1300 × 1300 × 65		5827	1350	1270	1350	1270	x	
	1400 × 700 × 65		5825	1450	1370	750	670	x	x
	1400 × 750 × 65		5815					x	x
	1400 × 800 × 65		5805	1450	1370	850	770	x	x
	1400 × 900 × 65		5835	1450	1370	950	870	x	x
	1400 × 1000 × 65		5839	1450	1370	1050	970	x	x
	1400 × 1400 × 65		5829	1450	1370	1450	1370	x	
	1500 × 700 × 65		5915	1550	1470	750	670	x	x
	1500 × 750 × 65		5925					x	x
	1500 × 800 × 65		5933	1550	1470	850	770	x	x
	1500 × 900 × 65		5935	1550	1470	950	870	x	x
	1500 × 1000 × 65		5945	1550	1470	1050	970	x	x
	1500 × 1500 × 65		5985						x
BetteSupra 1600-1800 mm	1600 × 700 × 65		5952	1650	1570	750	670	x	x
	1600 × 750 × 65		5954	1650	1570	800	720	x	x
	1600 × 800 × 65		5956	1650	1570	850	770	x	x
	1600 × 900 × 65		5962	1650	1570	950	870	x	x
	1600 × 1000 × 65		5968	1650	1570	1050	970	x	x
	1700 × 700 × 65		5993	1750	1670	750	670	x	x
	1700 × 750 × 65		5997	1750	1700	800	750	x	x
	1700 × 800 × 65		5972	1750	1650	850	750	x	x
	1700 × 900 × 65		5999	1750	1670	950	870	x	x
	1700 × 1000 × 65		5807	1750	1670	1050	970	x	x
	1800 × 800 × 65		5987	1850	1770	850	770	x	x
	1800 × 900 × 65		5983	1850	1770	950	870	x	x
	1800 × 1000 × 65		5809	1850	1770	1050	970	x	x
BetteSupra with polystyrene support	800 × 800 × 65		5820 T					x	
	900 × 700 × 65		5710 T					x	
	900 × 750 × 65		5770 T					x	
	900 × 900 × 65		5920 T					x	
	1000 × 800 × 65		5520 T					x	
	1000 × 1000 × 65		5620 T					x	
BetteQuinta 700-900 mm	700 × 700 × 150		5700	750	700	750	700	x	x
	750 × 700 × 150		5370	800	750	750	700	x	x
	750 × 750 × 150		5540	800	750	800	750	x	x
	800 × 700 × 150		5690	850	800	750	700	x	x
	800 × 750 × 150		5650	850	800	800	750	x	x
	800 × 800 × 150		5800	850	800	850	800	x	x
	850 × 700 × 150		5790					x	x
	850 × 750 × 150		1910					x	x

Subject to alteration and production tolerance.

model	dimensions in mm	variant	article no.	max. length	min. length	max. width	min. width	BetteUpstand	Profi Corner
BetteQuinta 700-900 mm	850 × 850 × 150		1920					x	x
	900 × 600 × 150		8620	950	900	650	600	x	x
	900 × 700 × 150		5730	950	900	750	700	x	x
	900 × 750 × 150		5750	950	900	800	750	x	x
	900 × 800 × 150		5950	950	900	850	800	x	x
	900 × 850 × 150		1900					x	x
	900 × 900 × 150		5900	950	900	950	900	x	x
BetteQuinta 1000-1200 mm	1000 × 700 × 150		5890	1050	1000	750	700	x	x
	1000 × 750 × 150		5560	1050	1000	800	750	x	x
	1000 × 800 × 150		5500	1050	1000	850	800	x	x
	1000 × 900 × 150		5390	1050	1000	950	900	x	x
	1000 × 1000 × 150		5600	1050	1000	1050	1000	x	x
	1050 × 750 × 150		8700					x	x
	1100 × 800 × 150		8740					x	x
	1100 × 900 × 150		8650	1150	1100	950	900	x	x
	1200 × 700 × 150		5990	1250	1200	750	700	x	x
	1200 × 750 × 150		5580	1250	1200	800	750	x	x
	1200 × 800 × 150		5850	1250	1200	850	800	x	x
	1200 × 900 × 150		1290	1250	1200	950	900	x	x
	1200 × 1000 × 150		8680	1250	1200	1050	1000	x	x
	1200 × 1200 × 150		5640	1250	1200	1250	1200	x	x
BetteDelta 800-900 mm	800 × 750 × 280		5660	850	800	800	750	x	x
	800 × 800 × 280		5810	850	800	850	800	x	x
	900 × 700 × 280		5740	950	900	750	700	x	x
	900 × 750 × 280		5760	950	900	800	750	x	x
	900 × 800 × 280		5960	950	900	850	800	x	x
	900 × 900 × 280		5910	950	900	950	900	x	x
BetteDelta 1000-1200 mm	1000 × 800 × 280		5510	1050	1000	850	800	x	x
	1000 × 1000 × 280		5610	1050	1000	1050	1000	x	x
	1200 × 800 × 280		5860	1250	1200	850	800	x	x
BetteCaro 35 mm, same shank length	800 × 800 × 35		5319					x	x
	900 × 900 × 35		7189					x	x
	1000 × 1000 × 35		7219					x	x
BetteCorner 35 mm, same shank length	800 × 800 × 35		5399					x	x
	900 × 900 × 35		5429					x	x
	1000 × 1000 × 35		5459					x	x
BetteCorner 35 mm, different shank length	750 × 900 × 35		8119					x	x
	800 × 900 × 35		5401					x	x
	900 × 750 × 35		8159					x	x
	900 × 800 × 35		5404					x	x
	900 × 1000 × 35		5461					x	x
	1000 × 900 × 35		5464					x	x

Subject to alteration and production tolerance.

Extras

01	Grips	07	Special size
02	BetteAnti-Slip Pro	08	BetteUpstand
03	BetteAnti-Slip Sense	09	BetteAirJet Plus Whirlsystem
04	BetteAntinoise System	10	BetteJet Whirlsystem
05	Drillings	11	BetteSpa Whirlsystem
06	Profi Corner		

+ = against surcharge
o = without surcharge
1 pc. / 2 pcs. = Grips against surcharge
↗ = special information

description	01	02	03	04	05	06	07	08	09	10	11
BetteArco			+	O	+					+	+
BetteArt			+	O							
BetteArt I			+	O	+						
BetteArt IV			+	O	+						
BetteArt V			+	O	+						
BetteBambino	1		+	+	+	+			+	+	+
BetteClassic	2		+	O	+	↗	↗	↗	+	+	+
BetteComodo	2		+	O	+	+	↗	↗	+	+	+
BetteComodo with side overflow	2		+	O	+	+	↗	↗	+	+	+
BetteDuett	1		+	O	+	+	↗	↗	+	+	+
BetteDuo	1		+	O	+	+	+	+	+	+	+
BetteEve			+	O	+	+		+	+	+	+
BetteEve Oval			+	O					+	+	+
BetteEve Oval Silhouette			+	O							+
BetteForm	2		+	+	+	+	+	↗	+	+	+
BetteFree			+	O	+				+	+	+
BetteLoft			+	O	↗				+	+	+
BetteLoft Ornament			+	O							
BetteLuna	1		+	O	+	+				+	+
BetteLux			+	O	+				+	+	+
BetteLux Oval			+	O	+				+	+	+
BetteLux Oval Couture			+	O							
BetteLux Oval Highline			+	O					+	+	+
BetteLux Oval Silhouette			+	O							+
BetteLux Oval I Silhouette			+	O	+						+
BetteLux Oval IV Silhouette			+	O	+						+
BetteLux Oval V Silhouette			+	O	+						+
BetteLux Shape			+								
BetteLux Silhouette			+	O							+
BetteLux Silhouette Side			+	O	+						+
BetteLux I Silhouette Side			+	O	+						+
BetteLux IV Silhouette Side			+	O	+						+
BetteLux V Silhouette Side			+	O	+						+
BetteMetric			+	O	+				+	+	+
BetteOcean	1		+	O	+	+	↗	+		+	+
BetteOcean Low-Line	1		+	O	+	+		+			+
BetteOne	1		+	O	+	+	↗	↗		+	+
BetteOne Relax	2		+	O	+	+	↗	↗	+	+	+
BettePond			+	O						+	+
BettePond Silhouette			+	O							+
BettePool I			+	O	+				+	+	+
BettePool I Panel			+	O	+				+	+	+
BettePool III			+	O	+				+	+	+
BettePool III Panel Corner Installation			+	O	+				+	+	+
BettePool Oval			+	O					+	+	+
BetteSelect	2		+	O	+	+	+	+	+	+	+
BetteSelect Duo	1		+	O	+	+	+	+	+	+	+
BetteSelect with side overflow	1		+	O	+	+	+	+	+	+	+
BetteSet	2		+	O	+	+	↗	+	+	+	+
BetteSpace L	1		+	O	+		+	+	+	+	+
BetteSpace M	1		+	O			+	+	+	+	+
BetteSpace S	1		+	O	↗		+	+	+	+	+
BetteStarlet	1		+	O	+	+	↗	↗	+	+	+
BetteStarlet I	1		+	O	+	+			+	+	+
BetteStarlet I Silhouette	1		+	O	+						+
BetteStarlet II	1		+	O	+	+			+	+	+
BetteStarlet IV	1		+	O	+	+			+	+	+
BetteStarlet IV Silhouette	1		+	O	+						+

Subject to alteration and production tolerance.

Extras

01	Grips	07	Special size
02	BetteAnti-Slip Pro	08	BetteUpstand
03	BetteAnti-Slip Sense	09	BetteAirJet Plus Whirlsystem
04	BetteAntinoise System	10	BetteJet Whirlsystem
05	Drillings	11	BetteSpa Whirlsystem
06	Profi Corner		

+ = against surcharge
o = without surcharge
1 pc. / 2 pcs. = Grips against surcharge
↗ = special information

description	01	02	03	04	05	06	07	08	09	10	11
BetteStarlet V	1		+	O	+	+			+	+	+
BetteStarlet V Silhouette	1		+	O	+						+
BetteStarlet Hexa	1		+	O	+				+	+	+
BetteStarlet Flair Oval	1		+	O	↗				+	+	+
BetteStarlet Oval	1		+	O	+				+	+	+
BetteStarlet Oval Silhouette	1		+	O	+						+
BetteStarlet Spirit	1		+	O	+				+	+	+
BetteStep	2		+	O	+	+	+	+			
LaBette	2		+	O	+	+	+	+			
BetteAir			+	O							
BetteFloor		+	+	O			↗				
BetteFloor Side		+	+	O			↗	↗			
BetteFlat		+		O							
BetteFloor Caro		+	+	O							
BetteFloor Corner		+	+	O							
BetteUltra 700-900 mm		+	+	O	↗	+	↗	+			
BetteUltra 1000 mm		+	+	O		+	+	+			
BetteUltra 1050-1500 mm		↗	+	O	↗	↗	↗	↗			
BetteUltra 1600-2000 mm			+	O	↗	+	+	+			
BetteUltra with polystyrene support			+	O				↗			
BetteSupra 700-900 mm		+	+	O	↗	+	↗	+			
BetteSupra 1000-1500 mm		+	+	O	↗	↗	↗	↗			
BetteSupra 1600-1800 mm		+	+	O		+	+	+			
BetteSupra with polystyrene support			+	O				+			
BetteQuinta 700-900 mm			+	+	↗	+	↗	+			
BetteQuinta 1000-1200 mm			+	+		+	+	+			
BetteDelta 800-900 mm			+	+	↗	+	+	+			
BetteDelta 1000-1200 mm			+	+		+	+	+			
BetteCaro 35 mm, same shank length			+			+	↗	+			
BetteCorner 35 mm, same shank length		+	+	O		+		+			
BetteCorner 35 mm, different shank length		+	+	O		+		+			

Subject to alteration and production tolerance.

Accessories

Waste and overflow

338 BetteSensory
309 Spare covers waste fittings shower areas / shower trays
308 Trap for wastes
302 Waste fittings shower trays / shower areas
312 Waste- and overflow fittings for baths

Mounting aid

359 Bath divider
342 Feet
358 Foam Central Support System
348 Foot-System
340 Installation Box BetteAir
341 Installation box BetteAir installation aid
346 Installation planning flush-to-floor showers
347 Minimum support Flex
344 Planning help installation systems
345 Planning help installation systems
357 Sealing Set BetteUpstand installation flush-to-floor
356 Sealing System
359 Sound insulation set
360 Wall brackets

Washbasin Accessories

364 Overflow cover
364 Pushwaste
363 Spare cover
362 Unslotted Waste
365 Waste- and overflow fitting BetteFlow

Equipment / surface

369 Blind plugs for grip holes
366 Grips
370 LED-Colour Spot Light
371 Relax
370 Whirlsystem Disinfection

Cleaning products

373 Bath Rubber
372 BetteEnamel-Cleaner
373 Care Cloth
374 Disinfection liquid
372 Enamel Spray Cleaner
374 Remalle

Furniture

376 Standing Mirror
377 Stool
376 Towel Rail
377 Wooden Inserts

Waste fittings shower trays / shower areas

BetteSolid 50, side outlet - 0,6 l/s

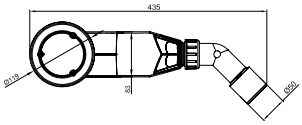

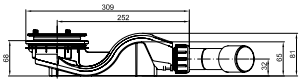

Information

Drainage direction: lateral
Installation height: 68 mm
Waste diameter: 90 mm
Drainage capacity: 0.6 l/sek
Water seal depth: 50 mm
Certification: Quality-controlled according to EN 274
Easy access for cleaning.

Scope of delivery:
incl. filter

PG	article no.	suitable for	Chrome 901	White and coloured → p.	White and coloured with Antislip Pro* | White 000 with Anti-Slip Sense*
IN	B598-	BetteFloor	167 €	224 €	224 €
		BetteCaro 35 mm, same shank length			
		BetteCorner 35 mm, different shank length			
		BetteCorner 35 mm, same shank length			
		BetteFlat			
		BetteFloor Caro			
		BetteFloor Corner			
		BetteFloor Side			
		BetteSupra 1000-1500 mm			
		BetteSupra 1600-1800 mm			
		BetteSupra 700-900 mm			
		BetteSupra with polystyrene support			
		BetteUltra 1000 mm			
		BetteUltra 1050-1500 mm			
		BetteUltra 1600-2000 mm			
		BetteUltra 700-900 mm			
		BetteUltra with polystyrene support			

* Please also state code AY or AX, refer to page 5 for order Information.

Subject to alteration and production tolerance.

Waste fittings shower trays / shower areas

BetteSolid 30, side outlet - 0,6 l/s

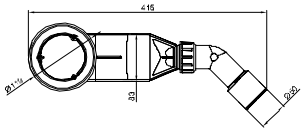

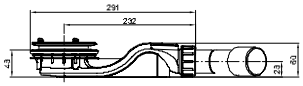

Information

Drainage direction: lateral
Installation height: 48 mm
Waste diameter: 90 mm
Drainage capacity: 0.6 l/sek
Water seal depth: 30 mm
Easy Access for cleaning.

Scope of delivery:
Incl. filter.

PG	article no.	suitable for	Chrome 901	White and coloured → p.	White and colou-red with Antislip Pro* | White 000 with Anti-Slip Sense*
IN	B597-	BetteFloor	167 €	224 €	224 €
		BetteCaro 35 mm, same shank length			
		BetteCorner 35 mm, different shank length			
		BetteCorner 35 mm, same shank length			
		BetteFlat			
		BetteFloor Caro			
		BetteFloor Corner			
		BetteFloor Side			
		BetteSupra 1000-1500 mm			
		BetteSupra 1600-1800 mm			
		BetteSupra 700-900 mm			
		BetteSupra with polystyrene support			
		BetteUltra 1000 mm			
		BetteUltra 1050-1500 mm			
		BetteUltra 1600-2000 mm			
		BetteUltra 700-900 mm			
		BetteUltra with polystyrene support			

* Please also state code AY or AX, refer to page 5 for order Information.

Technical information and prices of additional BetteExtras on page 270. Subject to alteration and production tolerance. Prices excluding VAT.

Waste fittings shower trays / shower areas

BetteScope, side outlet - 0,85 l/s

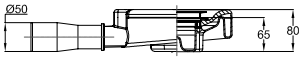

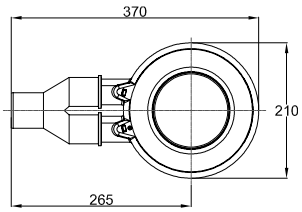

Information

Drainage direction: lateral
Installation height: 65 mm
Waste diameter: 90 mm
Drainage capacity: 0.85 l/sek
Water seal depth: 50 mm
Certification: Quality-controlled according to EN 274
With removable odour trap.

Scope of delivery:
Incl. hair trap.

PG	article no.	suitable for	Chrome 901	White and coloured → p.	White and coloured with Antislip Pro* | White 000 with Anti-Slip Sense*
IN	B574-	BetteFloor	174 €	231 €	231 €
		BetteCaro 35 mm, same shank length			
		BetteCorner 35 mm, different shank length			
		BetteCorner 35 mm, same shank length			
		BetteFlat			
		BetteFloor Caro			
		BetteFloor Corner			
		BetteFloor Side			
		BetteSupra 1000-1500 mm			
		BetteSupra 1600-1800 mm			
		BetteSupra 700-900 mm			
		BetteSupra with polystyrene support			
		BetteUltra 1000 mm			
		BetteUltra 1050-1500 mm			
		BetteUltra 1600-2000 mm			
		BetteUltra 700-900 mm			
		BetteUltra with polystyrene support			

* Please also state code AY or AX, refer to page 5 for order Information.

Subject to alteration and production tolerance.

Waste fittings shower trays / shower areas

BetteDown, vertical outlet - 0,6 l/s

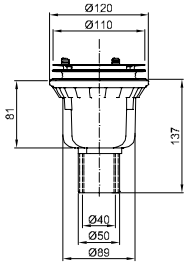

Information

Drainage direction: vertical
Installation height: 81 mm
Waste diameter: 90 mm
Drainage capacity: 0.6 l/sek
Water seal depth: 50 mm
Certification: Quality-controlled according to EN 274

Scope of delivery:
With removable odour trap.

PG	article no.	suitable for	Chrome 901	White and coloured → p.	White and colou-red with Antislip Pro* | White 000 with Anti-Slip Sense*
IN	B594-	BetteFloor	175 €	232 €	232 €
		BetteCaro 35 mm, same shank length			
		BetteCorner 35 mm, different shank length			
		BetteCorner 35 mm, same shank length			
		BetteFlat			
		BetteFloor Caro			
		BetteFloor Corner			
		BetteFloor Side			
		BetteSupra 1000-1500 mm			
		BetteSupra 1600-1800 mm			
		BetteSupra 700-900 mm			
		BetteSupra with polystyrene support			
		BetteUltra 1000 mm			
		BetteUltra 1050-1500 mm			
		BetteUltra 1600-2000 mm			
		BetteUltra 700-900 mm			
		BetteUltra with polystyrene support			

* Please also state code AY or AX, refer to page 5 for order Information.

Technical information and prices of additional BetteExtras on page 270. Subject to alteration and production tolerance. Prices excluding VAT.

Waste fittings shower trays / shower areas

BetteAir 30, side outlet - 0,6 l/s

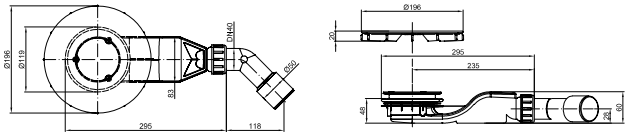

PG	article no.	suitable for	White 000	coloured → p.	White and coloured with Anti-Slip Pro* | White 000 with Anti-Slip Sense*
IN	B524-	BetteAir	267 €	267 €	267 €

* Please also state Code AY for BetteAnti-Slip Pro or AX for BetteAnti-Slip Sense, refer to page 5 for order Information.

Information

Drainage direction: lateral
Installation height: 48 mm
Drainage capacity: 0.6 l/sek
Water seal depth: 30 mm
Easy access for cleaning.

BetteAir 50, side outlet - 0,6 l/s

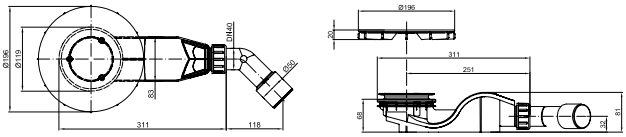

PG	article no.	suitable for	White 000	coloured → p.	White and coloured with Anti-Slip Pro* | White 000 with Anti-Slip Sense*
IN	B525-	BetteAir	267 €	267 €	267 €

* Please also state Code AY for BetteAnti-Slip Pro or AX for BetteAnti-Slip Sense, refer to page 5 for order Information.

Information

Drainage direction: lateral
Installation height: 68 mm
Drainage capacity: 0.6 l/sek
Water seal depth: 50 mm
Certification: Quality-controlled according to EN 274 in accordance with ABP P-4096 TRLP
Easy access for cleaning.

BetteAir Down, vertical outlet - 0,6 l/s

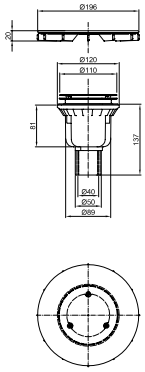

PG	article no.	suitable for	White 000	coloured → p.	White and coloured with Anti-Slip Pro* | White 000 with Anti-Slip Sense*
IN	B599-	BetteAir	276 €	276 €	276 €

* Please also state Code AY for BetteAnti-Slip Pro or AX for BetteAnti-Slip Sense, refer to page 5 for order Information.

Information

Drainage direction: vertical
Installation height: 81 mm
Drainage capacity: 0.62 l/sek
Water seal depth: 50 mm
Certification: Quality-controlled according to EN 274
Easy access for cleaning.

Scope of delivery:
With removable odour trap.

Subject to alteration and production tolerance.

Waste fittings shower trays / shower areas

Shower waste Ø 52 mm, lateral

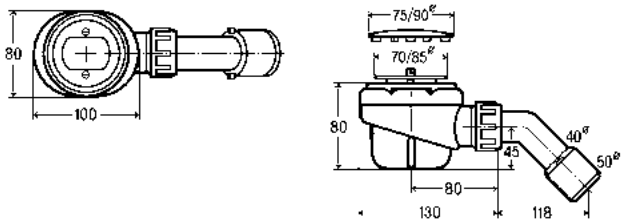

PG	article no.	suitable for	Chrome 901
IN	B577-	BetteQuinta 700-900 mm	73 €
		BetteQuinta 1000-1200 mm	

Information

Drainage direction: lateral
Installation height: 80 mm
Drainage capacity: 0.73 l/sek
Water seal depth: 50 mm
Certification: Quality-controlled according to EN 274

Technical information and prices of additional BetteExtras on page 270. Subject to alteration and production tolerance. Prices excluding VAT.

Hair Trap for wastes BetteDown and BetteScope

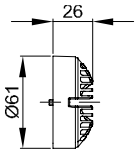

Variant

PG	article no.	description	price
CP	Z0015855	Hair trap for wastes BetteDown and BetteScope	13 €

Hair Trap for wastes BetteSolid and BetteAir

Variant

PG	article no.	description	price
CP	Z0017593	Trap for wastes BetteSolid and BetteAir	8 €

Subject to alteration and production tolerance.

Spare cover for waste fittings

Information

Waste cover made of chromed plastic.

For waste fittings shower areas and trays Ø 90 mm.

Variant

PG	article no.	description	price
CP	Z0015725	Spare cover Chrome 901	38 €

Technical information and prices of additional BetteExtras on page 270. Subject to alteration and production tolerance. Prices excluding VAT.

Glazed outlet cover Ø 115 mm

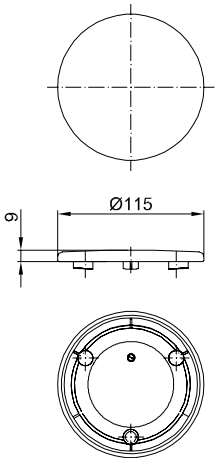

Information

In glazed titanium steel.

For waste fittings shower areas and trays Ø 90 mm.

Available in White, all exclusive colours, effect colours Blue Satin 418, Midnight 790 and Pergamon 001, Manhattan 002, Bahama Beige 003, Edelweiss 004, Jasmin 006, Ebony 035 and Black 056.

The colours Midnight 790 and Black 056 are not available with Antislip Pro.

Cannot be combined with BetteCompact.

PG	article no.	description	White 000 Cream 441, Silver 410, Hazel 417, Cacao 439, Slate 402, Snow 440, Flax 423, Dust 413, Flint 414, Graphite 404, Anthracite 401, Raven 400, Beige 422, Quartz 412, Stone 416, Taupe 438, Ebano 434, Sand 424, Greige 425, Cashmere 415, Smoke 403, Coffee 430, Blue Satin 418, Midnight 790, Pergamon 001, Manhattan 002, Bahama Beige 003, Edelweiß 004, Jasmin 006, Ebony 035 and Black 056	White 000 Cream 441, Silver 410, Hazel 417, Cacao 439, Slate 402, Snow 440, Flax 423, Dust 413, Flint 414, Graphite 404, Anthracite 401, Raven 400, Beige 422, Quartz 412, Stone 416, Taupe 438, Ebano 434, Sand 424, Greige 425, Cashmere 415, Smoke 403, Coffee 430, Blue Satin 418, Pergamon 001, Manhattan 002, Bahama Beige 003, Edelweiß 004, Jasmin 006, Ebony 035 with Antislip Pro*	White 000 with Antislip Sense*
CP	Y100-	Glazed outlet cover Ø 115 mm,	60 €	60 €	60 €

*Please also state code AY or AX, refer to page 5 for order Information.

Subject to alteration and production tolerance.

BetteAir glazed outlet cover

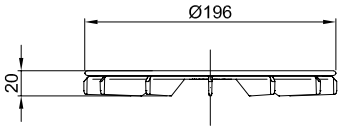

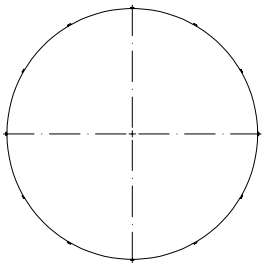

Information

In glazed titanium steel.

For BetteAir waste fittings.

The colours Midnight 790 and Black 056 are not available with Antislip Pro.

PG	article no.	description	White 000 Cream 441, Silver 410, Hazel 417, Cacao 439, Slate 402, Snow 440, Flax 423, Dust 413, Flint 414, Graphite 404, Anthracite 401, Raven 400, Beige 422, Quartz 412, Stone 416, Taupe 438, Ebano 434, Sand 424, Greige 425, Cashmere 415, Smoke 403, Coffee 430, Blue Satin 418, Midnight 790, Pergamon 001, Manhattan 002, Bahama Beige 003, Edelweiß 004, Jasmin 006, Ebony 035 and Black 056	White 000 Cream 441, Silver 410, Hazel 417, Cacao 439, Slate 402, Snow 440, Flax 423, Dust 413, Flint 414, Graphite 404, Anthracite 401, Raven 400, Beige 422, Quartz 412, Stone 416, Taupe 438, Ebano 434, Sand 424, Greige 425, Cashmere 415, Smoke 403, Coffee 430, Blue Satin 418, Pergamon 001, Manhattan 002, Bahama Beige 003, Edelweiß 004, Jasmin 006, Ebony 035 with Antislip Pro*	White 000 with Antislip Sense*
CP	Y102-	BetteAir glazed outlet cover,	78 €	78 €	78 €

*Please also state code AY or AX, refer to page 5 for order Information.

Technical information and prices of additional BetteExtras on page 270. Subject to alteration and production tolerance. Prices excluding VAT.

Waste- and overflow fittings for baths

Waste- and overflow fitting Ø 52 mm, 560 mm

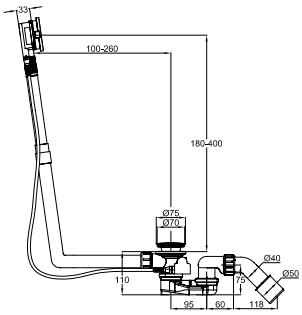

Information

Bowden cable length.: 40/50 x 560 mm
Installation height: 110 mm
Waste diameter: 52 mm
Drainage capacity: 0.92 l/sek
Water seal depth: 50 mm
Overflow capacity: 0.63 l/sek
Certification: Quality-controlled according to EN 274

PG	article no.	suitable for	Chrome 901	White 000
IN	B600-	BetteArco	150 €	180 €
		BetteBambino		
		BetteClassic		
		BetteDelta 1000-1200 mm		
		BetteDelta 800-900 mm		
		BetteDuett		
		BetteDuo		
		BetteForm		
		BetteSelect Duo		
		BetteSet		
		BetteSpace L		
		BetteSpace M		
		BetteSpace S		
		BetteStep		
		LaBette		

Subject to alteration and production tolerance.

Waste- and overflow fittings for baths

Waste- and overflow fitting Silhouette Ø 52 mm, 725 mm

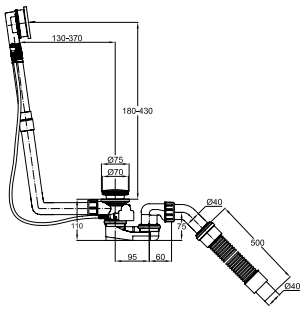

Information

Bowden cable length.: 40/50 x 725 mm
Installation height: 110 mm
Waste diameter: 52 mm
Drainage capacity: 0.92 l/sek
Water seal depth: 50 mm
Overflow capacity: 0.63 l/sek
Certification: Quality-controlled according to EN 274

Scope of delivery:
a flexible drain pipe for the installation is included

PG	article no.	suitable for	Chrome 901	White 000
IN	B601-	BetteLoft Ornament	214 €	245 €
		BetteLux I Silhouette Side		
		BetteLux IV Silhouette Side		
		BetteLux Oval Couture		
		BetteLux Oval I Silhouette		
		BetteLux Oval IV Silhouette		
		BetteLux Oval Silhouette		
		BetteLux Oval V Silhouette		
		BetteLux Silhouette		
		BetteLux Silhouette Side		
		BetteLux V Silhouette Side		
		BetteStarlet I Silhouette		
		BetteStarlet IV Silhouette		
		BetteStarlet Oval Silhouette		
		BetteStarlet V Silhouette		

Technical information and prices of additional BetteExtras on page 270. Subject to alteration and production tolerance. Prices excluding VAT.

Waste- and overflow fittings for baths

Waste- and overflow fitting Ø 52 mm, 725 mm

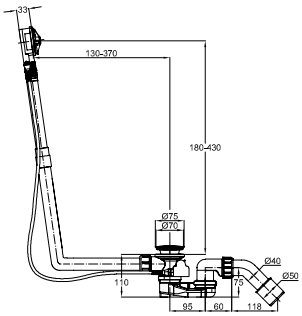

Information

Bowden cable length.: 40/50 x 725 mm
Installation height: 110 mm
Waste diameter: 52 mm
Drainage capacity: 0.92 l/sek
Water seal depth: 50 mm
Overflow capacity: 0.63 l/sek
Certification: Quality-controlled according to EN 274

PG	article no.	suitable for	Chrome 901	White 000
IN	B602-	BetteComodo	154 €	177 €
		BetteComodo with side overflow		
		BetteFree		
		BetteLoft		
		BetteLuna		
		BetteLux		
		BetteLux Oval		
		BetteLux Oval Highline		
		BetteMetric		
		BetteOcean		
		BetteOcean Low-Line		
		BetteOne		
		BetteOne Relax		
		BetteSelect with side overflow		
		BetteStarlet		
		BetteStarlet Flair Oval		
		BetteStarlet Hexa		
		BetteStarlet I		
		BetteStarlet II		
		BetteStarlet IV		
		BetteStarlet Oval		
		BetteStarlet Spirit		
		BetteStarlet V		

Subject to alteration and production tolerance.

Waste- and overflow fittings for baths

Waste- and overflow fitting Ø 52 mm, 1070 mm

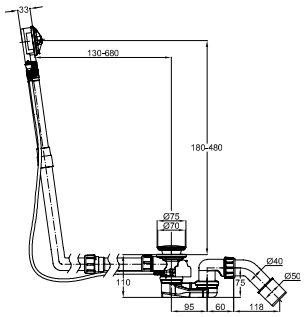

Information

Bowden cable length.: 40/50 x 1070 mm
Installation height: 110 mm
Waste diameter: 52 mm
Drainage capacity: 0.92 l/sek
Water seal depth: 50 mm
Overflow capacity: 0.63 l/sek
Certification: Quality-controlled according to EN 274

PG	article no.	suitable for	Chrome 901	White 000
IN	B603-	BetteFree	196 €	233 €
		BetteLoft		
		BetteLux		
		BetteSelect		
		BetteStarlet		
		BetteStarlet Flair Oval		
		BetteStarlet Oval		

Technical information and prices of additional BetteExtras on page 270. Subject to alteration and production tolerance. Prices excluding VAT.

Waste- and overflow fittings for baths

Waste, overflow and filling unit Ø 52 mm, 560 mm

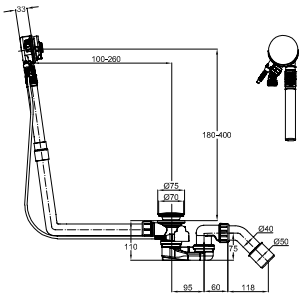

Information

Bowden cable length.: 40/50 x 560 mm
Installation height: 110 mm
Waste diameter: 52 mm
Drainage capacity: 0.92 l/sek
Water seal depth: 50 mm
Overflow capacity: 0.63 l/sek
Certification: Quality-controlled according to EN 274

PG	article no.	suitable for	Chrome 901	White 000
IN	B604-	BetteArco	403 €	477 €
		BetteBambino		
		BetteClassic		
		BetteDuett		
		BetteForm		
		BetteSelect Duo		
		BetteSet		
		BetteSpace L		
		BetteSpace M		
		BetteSpace S		
		BetteStep		
		LaBette		

Subject to alteration and production tolerance.

Waste- and overflow fittings for baths

Waste, overflow and filling unit Silhouette Ø 52 mm, 725 mm

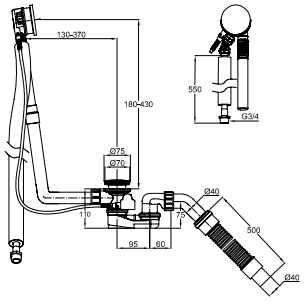

Information

Bowden cable length.: 40/50 x 725 mm
Installation height: 110 mm
Waste diameter: 52 mm
Drainage capacity: 0.92 l/sek
Water seal depth: 50 mm
Overflow capacity: 0.63 l/sek
Certification: Quality-controlled according to EN 274a flexible drain pipe for the installation is included

Scope of delivery:
incl. flexible waste water connection and hose for water connection

PG	article no.	suitable for	Chrome 901	White 000
IN	B605-	BetteLoft Ornament	606 €	692 €
		BetteLux I Silhouette Side		
		BetteLux IV Silhouette Side		
		BetteLux Oval Couture		
		BetteLux Oval I Silhouette		
		BetteLux Oval IV Silhouette		
		BetteLux Oval Silhouette		
		BetteLux Oval V Silhouette		
		BetteLux Silhouette		
		BetteLux Silhouette Side		
		BetteLux V Silhouette Side		
		BetteStarlet I Silhouette		
		BetteStarlet IV Silhouette		
		BetteStarlet Oval Silhouette		
		BetteStarlet V Silhouette		

Technical information and prices of additional BetteExtras on page 270. Subject to alteration and production tolerance. Prices excluding VAT.

Waste- and overflow fittings for baths

Waste, overflow and filling unit Ø 52 mm, 725 mm

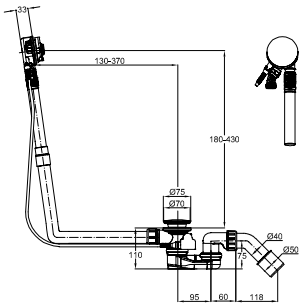

Information

Bowden cable length.: 40/50 x 725 mm
Installation height: 110 mm
Waste diameter: 52 mm
Drainage capacity: 0.92 l/sek
Water seal depth: 50 mm
Overflow capacity: 0.63 l/sek
Certification: Quality-controlled according to EN 274

PG	article no.	suitable for	Chrome 901	White 000
IN	B606-	BetteComodo	423 €	514 €
		BetteComodo with side overflow		
		BetteFree		
		BetteLoft		
		BetteLuna		
		BetteLux		
		BetteLux Oval		
		BetteLux Oval Highline		
		BetteMetric		
		BetteOcean		
		BetteOcean Low-Line		
		BetteOne		
		BetteOne Relax		
		BetteSelect with side overflow		
		BetteStarlet		
		BetteStarlet Flair Oval		
		BetteStarlet Hexa		
		BetteStarlet I		
		BetteStarlet II		
		BetteStarlet IV		
		BetteStarlet Oval		
		BetteStarlet Spirit		
		BetteStarlet V		

Subject to alteration and production tolerance.

Waste- and overflow fittings for baths

Waste, overflow and filling unit Ø 52 mm, 1070 mm

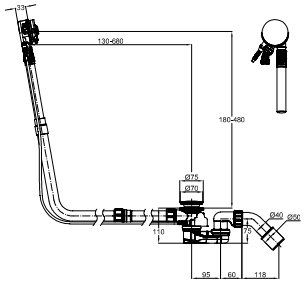

Information

Bowden cable length.: 40/50 x 1070 mm
Installation height: 110 mm
Waste diameter: 52 mm
Drainage capacity: 0.92 l/sek
Water seal depth: 50 mm
Overflow capacity: 0.63 l/sek
Certification: Quality-controlled according to EN 274

PG	article no.	suitable for	Chrome 901	White 000
IN	B607-	BetteFree	469 €	552 €
		BetteLoft		
		BetteLux		
		BetteSelect		
		BetteStarlet		
		BetteStarlet Flair Oval		
		BetteStarlet Oval		

Technical information and prices of additional BetteExtras on page 270. Subject to alteration and production tolerance. Prices excluding VAT.

Waste- and overflow fittings for baths

Waste- and overflow fitting Ø 90 mm, 725 mm

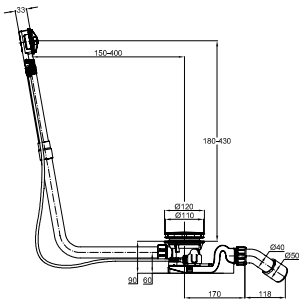

Information

Bowden cable length.: 40/50 x 725 mm
Installation height: 90 mm
Waste diameter: 90 mm
Drainage capacity: 1.25 l/sek
Water seal depth: 50 mm
Overflow capacity: 0.63 l/sek
Certification: Quality-controlled according to EN 274

PG	article no.	suitable for	Chrome 901	White 000
IN	B608-	BetteEve	232 €	245 €
		BetteEve Oval		
		BettePond		
		BettePool I		
		BettePool I Panel		
		BettePool III		
		BettePool III Panel Corner Installation		
		BettePool Oval		

Subject to alteration and production tolerance.

Waste- and overflow fittings for baths

Waste- and overflow fitting Silhouette Ø 90 mm, 725 mm

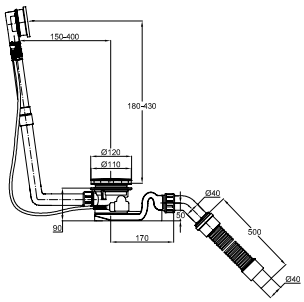

Information

Bowden cable length.: 40/50 x 725 mm
Installation height: 90 mm
Waste diameter: 90 mm
Drainage capacity: 1.25 l/sek
Water seal depth: 50 mm
Overflow capacity: 0.63 l/sek
Certification: Quality-controlled according to EN 274

Scope of delivery:
a flexible drain pipe for the installation is included

PG	article no.	suitable for	Chrome 901	White 000
IN	B609-	BetteEve Oval Silhouette	311 €	341 €
		BettePond Silhouette		

Technical information and prices of additional BetteExtras on page 270. Subject to alteration and production tolerance. Prices excluding VAT.

Waste- and overflow fittings for baths

Waste, overflow and filling unit Ø 90 mm, 725 mm

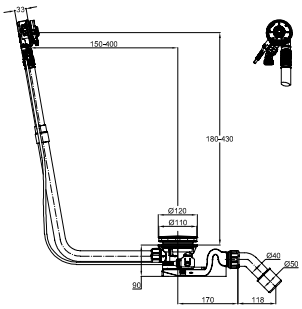

Information

Bowden cable length.: 40/50 x 725 mm
Installation height: 90 mm
Waste diameter: 90 mm
Drainage capacity: 1.25 l/sek
Water seal depth: 50 mm
Overflow capacity: 0.63 l/sek
Certification: Quality-controlled according to EN 274

PG	article no.	suitable for	Chrome 901	White 000
IN	B611-	BetteEve	535 €	566 €
		BetteEve Oval		
		BettePond		
		BettePool I		
		BettePool I Panel		
		BettePool III		
		BettePool III Panel Corner Installation		
		BettePool Oval		

Subject to alteration and production tolerance.

Waste- and overflow fittings for baths

Waste, overflow and filling unit Silhouette Ø 90 mm, 725 mm

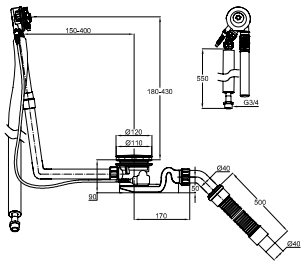

Information

Bowden cable length.: 40/50 x 725 mm
Installation height: 90 mm
Waste diameter: 90 mm
Drainage capacity: 1.25 l/sek
Water seal depth: 50 mm
Overflow capacity: 0.63 l/sek
Certification: Quality-controlled according to EN 274

Scope of delivery:
incl. flexible waste water connection and hose for water connection

PG	article no.	suitable for	Chrome 901	White 000
IN	B612-	BetteEve Oval Silhouette	762 €	807 €
		BettePond Silhouette		

Technical information and prices of additional BetteExtras on page 270. Subject to alteration and production tolerance. Prices excluding VAT.

Waste- and overflow fittings for baths

Waste- and overflow fitting Plus 5, Ø 52 mm, 560 mm

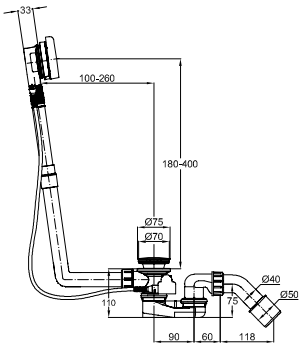

Information

Bowden cable length.: 40/50 x 560 mm
Installation height: 110 mm
Waste diameter: 52 mm
Drainage capacity: 0.92 l/sek
Water seal depth: 50 mm
Overflow capacity: 0.63 l/sek- 50 mm higher water level for maximum bathing comfort

PG	article no.	suitable for	Chrome 901
IN	B617-	BetteArco	234 €
		BetteBambino	
		BetteClassic	
		BetteDuett	
		BetteDuo	
		BetteForm	
		BetteSelect Duo	
		BetteSet	
		BetteSpace L	
		BetteSpace M	
		BetteSpace S	
		BetteStep	
		LaBette	

Subject to alteration and production tolerance.

Waste- and overflow fittings for baths

Waste- and overflow fitting Plus 5, Ø 52 mm, 1070 mm

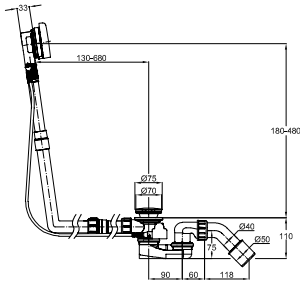

Information

Bowden cable length.: 40/50 x 1070 mm
Installation height: 110 mm
Waste diameter: 52 mm
Drainage capacity: 0.92 l/sek
Water seal depth: 50 mm
Overflow capacity: 0.63 l/sek- 50 mm higher water level for maximum bathing comfort

PG	article no.	suitable for	Chrome 901
IN	B619-	BetteComodo	267 €
		BetteComodo with side overflow	
		BetteFree	
		BetteLoft	
		BetteLux	
		BetteLux Oval	
		BetteLux Oval Highline	
		BetteMetric	
		BetteOcean	
		BetteOcean Low-Line	
		BetteOne	
		BetteOne Relax	
		BetteSelect	
		BetteSelect with side overflow	
		BetteStarlet	
		BetteStarlet Flair Oval	
		BetteStarlet Hexa	
		BetteStarlet I	
		BetteStarlet II	
		BetteStarlet IV	
		BetteStarlet Oval	
		BetteStarlet Spirit	
		BetteStarlet V	

Technical information and prices of additional BetteExtras on page 270. Subject to alteration and production tolerance. Prices excluding VAT.

Waste- and overflow fittings for baths

Waste- and overflow fitting Plus 5, Ø 90 mm, 1070 mm

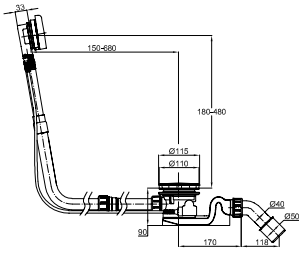

Information

Bowden cable length.: 40/50 x 1070 mm
Installation height: 90 mm
Waste diameter: 52 mm
Drainage capacity: 1.25 l/sek
Water seal depth: 50 mm
Overflow capacity: 0.63 l/sek- 50 mm higher water level for maximum bathing comfort

PG	article no.	suitable for	Chrome 901
IN	B621-	BetteEve	287 €
		BetteEve Oval	
		BettePond	

Subject to alteration and production tolerance.

Waste- and overflow fittings for baths

Waste- and overflow fitting Plus 5 Silhouette Ø 52 mm, 1070 mm

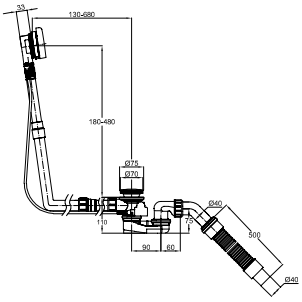

Information

Bowden cable length.: 40/50 x 1070 mm
Installation height: 110 mm
Waste diameter: 52 mm
Drainage capacity: 0.92 l/sek
Water seal depth: 50 mm
Overflow capacity: 0.63 l/sek

Scope of delivery:
a flexible drain pipe for the installation is included

PG	article no.	suitable for	Chrome 901
IN	B625-	BetteLoft Ornament	346 €
		BetteLux I Silhouette Side	
		BetteLux IV Silhouette Side	
		BetteLux Oval Couture	
		BetteLux Oval I Silhouette	
		BetteLux Oval IV Silhouette	
		BetteLux Oval Silhouette	
		BetteLux Oval V Silhouette	
		BetteLux Silhouette	
		BetteLux Silhouette Side	
		BetteLux V Silhouette Side	
		BetteStarlet I Silhouette	
		BetteStarlet IV Silhouette	
		BetteStarlet Oval Silhouette	
		BetteStarlet V Silhouette	

Technical information and prices of additional BetteExtras on page 270. Subject to alteration and production tolerance. Prices excluding VAT.

Waste- and overflow fittings for baths

Waste- and overflow fitting Plus 5 Silhouette Ø 90 mm, 1070 mm

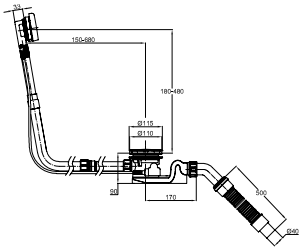

Information

Bowden cable length.: 40/50 x 1070 mm
Installation height: 90 mm
Waste diameter: 90 mm
Drainage capacity: 1.25 l/sek
Water seal depth: 50 mm
Overflow capacity: 0.63 l/sek

Scope of delivery:
a flexible drain pipe for the installation is included

PG	article no.	suitable for	Chrome 901
IN	B627-	BetteEve Oval Silhouette	383 €
		BettePond Silhouette	

Subject to alteration and production tolerance.

Waste- and overflow fittings for baths

Waste, overflow and filling unit Plus 5, Ø 52 mm, 560 mm

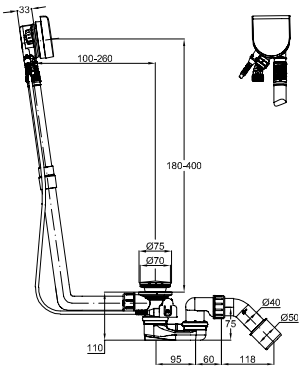

Information

Bowden cable length.: 40/50 x 560 mm
Installation height: 110 mm
Waste diameter: 52 mm
Drainage capacity: 0.92 l/sek
Water seal depth: 50 mm
Overflow capacity: 0.63 l/sek- 50 mm higher water level for maximum bathing comfort

PG	article no.	suitable for	Chrome 901
IN	B618-	BetteArco	456 €
		BetteBambino	
		BetteClassic	
		BetteDuett	
		BetteForm	
		BetteSelect Duo	
		BetteSet	
		BetteSpace L	
		BetteSpace M	
		BetteSpace S	
		BetteStep	
		LaBette	

Technical information and prices of additional BetteExtras on page 270. Subject to alteration and production tolerance. Prices excluding VAT.

Waste- and overflow fittings for baths

Waste, overflow and filling unit Plus 5, Ø 52 mm, 1070 mm

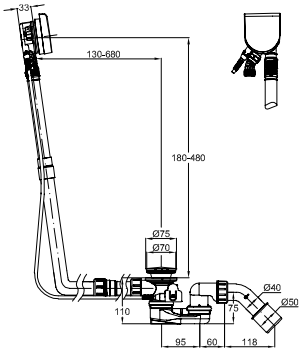

Information

Bowden cable length.: 40/50 x 1070 mm
Installation height: 110 mm
Waste diameter: 52 mm
Drainage capacity: 0.92 l/sek
Water seal depth: 50 mm
Overflow capacity: 0.63 l/sek- 50 mm higher water level for maximum bathing comfort

PG	article no.	suitable for	Chrome 901
IN	B620-	BetteComodo	529 €
		BetteComodo with side overflow	
		BetteFree	
		BetteLoft	
		BetteLux	
		BetteLux Oval	
		BetteLux Oval Highline	
		BetteMetric	
		BetteOcean	
		BetteOcean Low-Line	
		BetteOne	
		BetteOne Relax	
		BetteSelect	
		BetteSelect with side overflow	
		BetteStarlet	
		BetteStarlet Flair Oval	
		BetteStarlet Hexa	
		BetteStarlet I	
		BetteStarlet II	
		BetteStarlet IV	
		BetteStarlet Oval	
		BetteStarlet Spirit	
		BetteStarlet V	

Subject to alteration and production tolerance.

Waste- and overflow fittings for baths

Waste, overflow and filling unit Plus 5, Ø 90 mm, 1070 mm

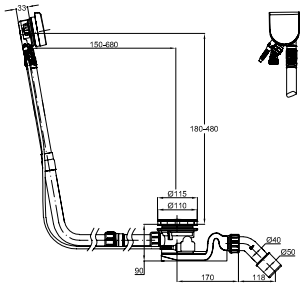

Information

Bowden cable length.: 40/50 x 1070 mm
Installation height: 90 mm
Waste diameter: 90 mm
Drainage capacity: 1.25 l/sek
Water seal depth: 50 mm
Overflow capacity: 0.63 l/sek

PG	article no.	suitable for	Chrome 901
IN	B622-	BetteEve	655 €
		BetteEve Oval	
		BettePond	

Technical information and prices of additional BetteExtras on page 270. Subject to alteration and production tolerance. Prices excluding VAT.

Waste- and overflow fittings for baths

Waste, overflow and filling unit Plus 5 Silhouette Ø 52 mm, 1070 mm

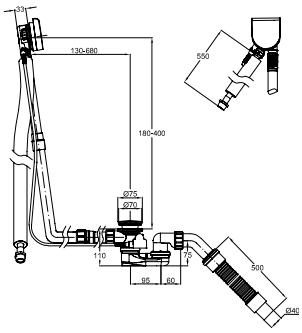

Information

Bowden cable length.: 40/50 x 1070 mm
Installation height: 110 mm
Waste diameter: 52 mm
Drainage capacity: 0.92 l/sek
Water seal depth: 50 mm
Overflow capacity: 0.63 l/sek- 50 mm higher water level for maximum bathing comfort

PG	article no.	suitable for	Chrome 901
IN	B626-	BetteLoft Ornament	731 €
		BetteLux I Silhouette Side	
		BetteLux IV Silhouette Side	
		BetteLux Oval Couture	
		BetteLux Oval I Silhouette	
		BetteLux Oval IV Silhouette	
		BetteLux Oval Silhouette	
		BetteLux Oval V Silhouette	
		BetteLux Silhouette	
		BetteLux Silhouette Side	
		BetteLux V Silhouette Side	
		BetteStarlet I Silhouette	
		BetteStarlet IV Silhouette	
		BetteStarlet Oval Silhouette	
		BetteStarlet V Silhouette	

Subject to alteration and production tolerance.

Waste- and overflow fittings for baths

Waste, overflow and filling unit Plus 5 Silhouette, Ø 90 mm, 1070 mm

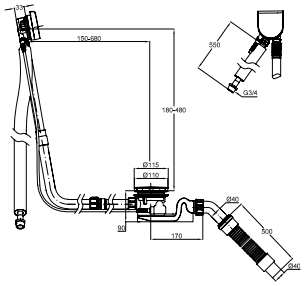

Information

Bowden cable length.: 40/50 x 1070 mm
Installation height: 90 mm
Waste diameter: 90 mm
Drainage capacity: 1.25 l/sek
Water seal depth: 50 mm
Overflow capacity: 0.63 l/sek

Scope of delivery:
a flexible drain pipe for the installation is included

PG	article no.	suitable for	Chrome 901
IN	B628-	BetteEve Oval Silhouette	940 €
		BettePond Silhouette	

Technical information and prices of additional BetteExtras on page 270. Subject to alteration and production tolerance. Prices excluding VAT.

Waste- and overflow fittings for baths

Waste- and overflow fitting BetteArt

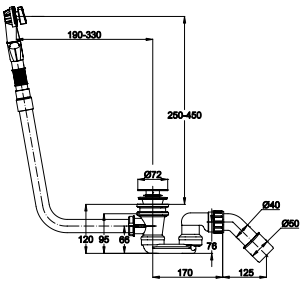

Information

Installation height: 110 mm
Waste diameter: 52 mm
Drainage capacity: 0.87 l/sek
Water seal depth: 50 mm
Overflow capacity: 0.63 l/sek
Certification: Quality-controlled according to EN 274

PG	article no.	suitable for	Chrome 901	White 000
IN	B614-	BetteArt	646 €	715 €
		BetteArt I		
		BetteArt IV		
		BetteArt V		

Subject to alteration and production tolerance.

Waste- and overflow fittings for baths

Waste, overflow and filling unit Trio BetteArt, 725 mm

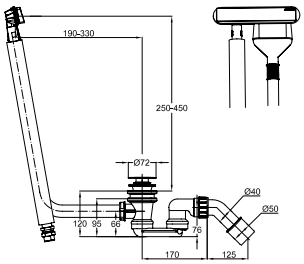

Information

Installation height: 110 mm
Waste diameter: 52 mm
Drainage capacity: 0.87 l/sek
Water seal depth: 50 mm
Overflow capacity: 0.6 l/sek
Certification: Quality-controlled according to EN 274

PG	article no.	suitable for	Chrome 901	White 000
IN	B615-	BetteArt	980 €	1.153 €
		BetteArt I		
		BetteArt IV		
		BetteArt V		

Technical information and prices of additional BetteExtras on page 270. Subject to alteration and production tolerance. Prices excluding VAT.

Waste- and overflow fittings for baths

Waste- and overflow fitting Simplex Ø 52 mm, 560 mm

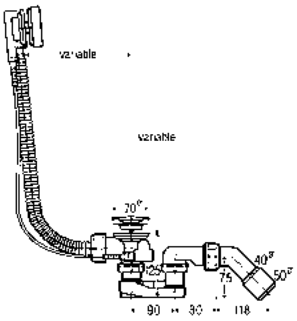

Information

Bowden cable length.: 40/50 x 560 mm
Installation height: 125 mm
Waste diameter: 52 mm
Drainage capacity: 0.92 l/sek
Water seal depth: 50 mm
Overflow capacity: 0.63 l/sek

PG	article no.	suitable for	Chrome 901
IN	B629-	BetteBambino	90 €
		BetteClassic	
		BetteForm	
		BetteStep	
		LaBette	

Subject to alteration and production tolerance.

Waste- and overflow fittings for baths

Waste- and overflow fitting Simplex Ø 52 mm, 725 mm

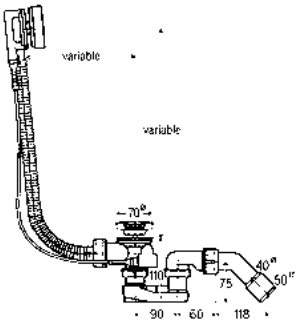

Information

Bowden cable length.: 40/50 x 725 mm
Installation height: 125 mm
Waste diameter: 52 mm
Drainage capacity: 0.92 l/sek
Water seal depth: 50 mm
Overflow capacity: 0.63 l/sek

PG	article no.	suitable for	Chrome 901
IN	B630-	BetteSelect with side overflow	99 €

Technical information and prices of additional BetteExtras on page 270. Subject to alteration and production tolerance. Prices excluding VAT.

BetteSensory

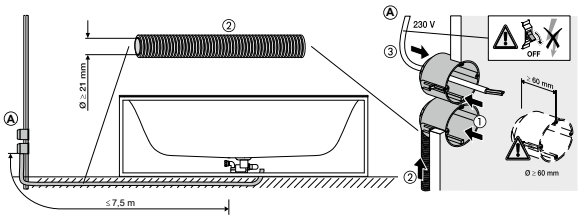

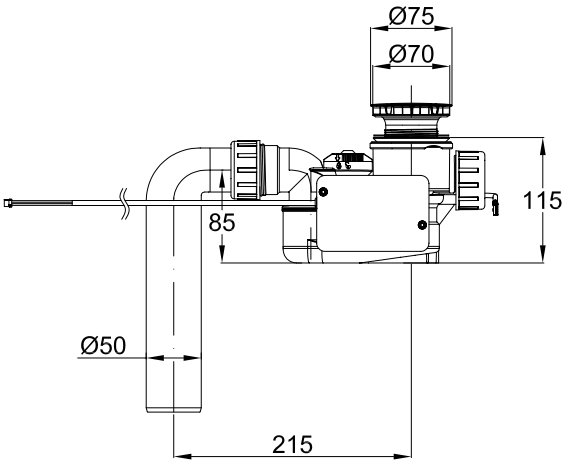

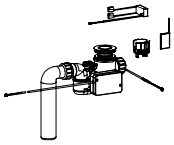

Information

Pop-up wastes with no visible overflow. The overflow function is provided by a pressure sensor integrated in the pop-up waste that records the water level in the bath.
Included in the delivery of the pop-up waste are a control box, a 12-volt mains unit and two 8-m control cables. The control box, which includes an emergency battery, and the mains unit need to be integrated using the 8-m cable in two accessible flush-mounted boxes outside the bath.

A 230-volt power connection is required there.

The control cable needs to be laid from the concealed socket to under the bath for connection to the fitting.

The baths need to be ordered with the ending oUeL.

Further information on installation and functioning can be found at www.my-bette.com.

Scope of delivery

- Control box
- 12-volt mains unit
- emergency battery
- two 8-m control cables

Variant

PG	article no.	description	Chrome 901	White 000
IN	B631-	BetteSensory	1.040 €	1.151 €

*The baths need to be ordered with the ending oUeL.

Subject to alteration and production tolerance.

Installation Box BetteAir

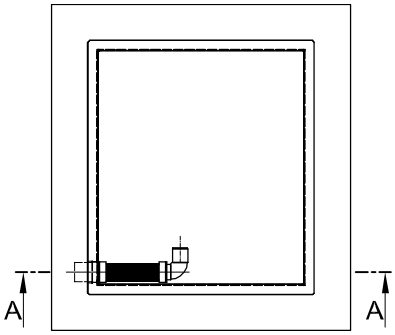

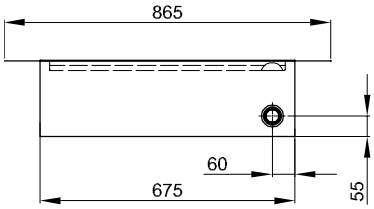

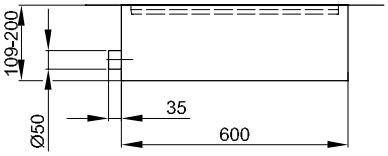

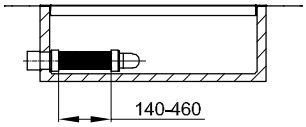

Information

Depending on the floor construction, the BetteAir Connect installation box can easily be cut to a height between 109 and 200 mm.

Minimum box height with:
BetteAir 30 (order no. B524-) - 109 mm
BetteAir 50 (order no. B525-) - 126 mm

Scope of delivery

- Box made of EPP
- Protective building cover made of corrugated cardboard E1.03
- Pre-assembled flexi connector
- Sealing collar
- Foil adhesive

Certification

For standard sealing according to DIN 18534-1.

Variant

PG	article no.	description	pcs/pallet	price
IN	B57-0401	Installation Box BetteAir	15	272 €

Subject to alteration and production tolerance.

Installation box BetteAir installation aid

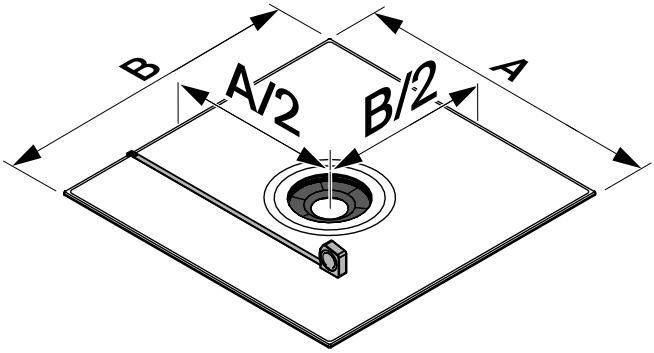

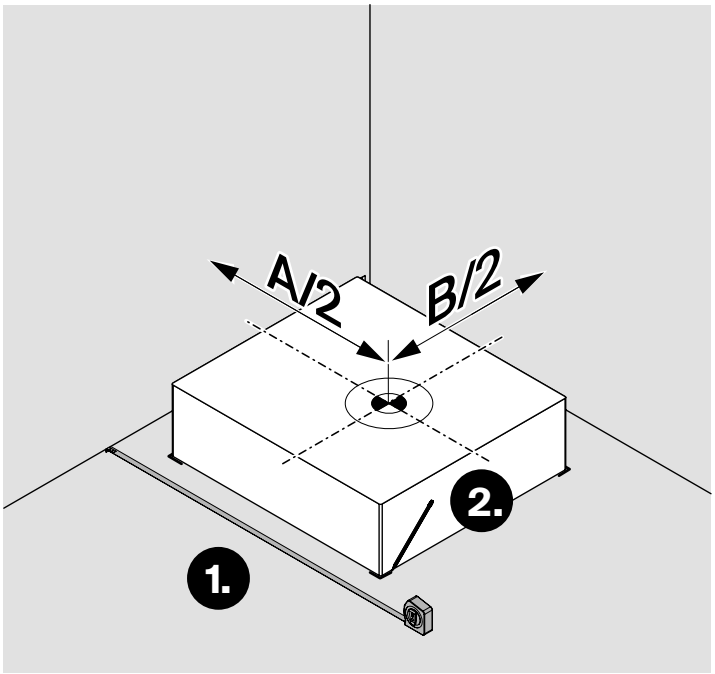

Technical information and prices of additional BetteExtras on page 270. Subject to alteration and production tolerance. Prices excluding VAT.

Feet

Bath feet universal

Information

Bath foot for parallel bath base geometries.
Adjustment range 65 mm
Bath feet for direct installation onto the bath base providing optimum stability.
The feet are height adjustable, and when used in combination with the sound insulation set B57-0100, are sound insulating to DIN 4109/A1.

Scope of delivery

Set of two feet.

PG	article no.	description	pcs/pallet	price
IN	B23-1500	Bath feet universal	150	75 €

Bath feet, oval

Information

Bath foot for oval bath base geometries
Adjustment range 70 mm
Bath feet for direct installation onto the bath base providing optimum stability.
The feet are height adjustable, and when used in combination with the sound insulation set B57-0100, are sound insulating to DIN 4109/A1.

Scope of delivery

Four single feet for diagonal installation

PG	article no.	description	pcs/pallet	price
IN	B23-1525	Bath feet, oval	150	88 €

Bath feet BetteStep

Information

Adjustment range 50 mm
Bath feet for direct installation onto the bath base providing optimum stability.
The feet are height adjustable, and when used in combination with the sound insulation set B57-0100, are sound insulating to DIN 4109/A1.

Scope of delivery

One set of bath feet, one galvanised steel frame with height adjusters.

PG	article no.	description	pcs/pallet	price
IN	B23-1520	Bath feet BetteStep	150	97 €

Subject to alteration and production tolerance.

Feet

Height-adjustable feet (4 pieces)

Information

Adjustment range 110-180 mm and 80mm plastic sleeve.
For fitting to factory-fitted feet brackets on large-scale baths.
An M12 threaded rod provides the optimum stability.
The feet are height adjustable, and when used in combination with the sound insulation set B57-0120, are sound insulating to DIN 4109/A1.
Suitable for BetteArco, BetteHome Oval, BettePool, BetteSpace L

Scope of delivery

4 pieces

PG	article no.	description	pcs/pallet	price
IN	B50-0015	Height-adjustable feet (4 pieces)	400	49 €

Height-adjustable feet (6 pieces)

Information

Adjustment range 110 - 180 mm and 80mm plastic sleeve.
For fitting to factory-fitted feet brackets on large-scale baths.
An M12 threaded rod provides the optimum stability.
The feet are height adjustable, and when used in combination with the sound insulation set B57-0120, are sound insulating to DIN 4109/A1.
Suitable for: BettePond

Scope of delivery

6 pieces

PG	article no.	description	pcs/pallet	price
IN	B50-0016	Height-adjustable feet (6 pieces)	400	60 €

Technical information and prices of additional BetteExtras on page 270. Subject to alteration and production tolerance. Prices excluding VAT.

Planning help installation systems

		Installation						
		Flush-to-floor installation		Raised installation				for combination with Bette Upstand
		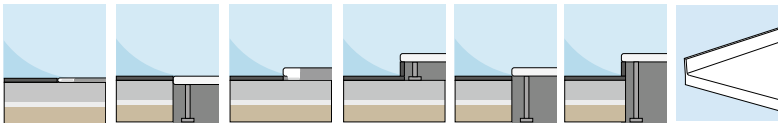						
BetteAir	Minimum Support	x						
BetteFloor	Foot-System		x		x	x	x	
	Minimum Support			x				
BetteFloor Side	Foot-System		x		x	x	x	x
	Minimum Support			x				x
BetteUltra	Foot-System		x		x	x	x	x
	Minimum Support			x				x
	Polystyrene support ***				x			
BetteSupra	Foot-System					x	x	x
	Polystyrene support ***				x			
BetteFloor Caro	Foot-System				x	x	x	
BetteFloor Corner	Foot-System				x	x	x	
BetteCaro	Foot-System BetteCaro				x	x	x	x
BetteCorner	Foot-System BetteCorner				x	x	x	x
BetteQuinta	Foot-System		x		x	x	x	x

Adjustment range

Installation system	Adjustment range
Foot-System, Foot-System BetteCaro, Foot-System BetteCorner	80 – 200 mm With a separate spacer: 205 – 325 mm
Minimum support	–

* Figures on the screed on installation.

** As per the structural test report

*** Only available for selected product dimensions,

Subject to alteration and production tolerance.

Planning help installation systems

		Sound insulation		Seals					
		Sound insulation level 3 < 25 dB(A)		Tested waterproof seal included in the delivery	Optional: Seal cutting protection		Optional: Seal without cutting protection		
		As per VDI 4100	As per DIN 4109			Flush-to-Floor	Installation Box BetteAir B57-0401	Sealing system for wooden floors B57-0375	Other sealing systems
BetteAir	Minimum Support	18 dB(A)**	21 dB(A)**				x		
BetteFloor	Foot-System				B57-0376			x	B57-0370
	Minimum Support	15 dB(A)*	17 dB(A)*					x	B57-0371
BetteFloor Side	Foot-System				B57-0376			x	B57-0370
	Minimum Support							x	B57-0371
BetteUltra	Foot-System				B57-0376			x	B57-0370
	Minimum Support	16 dB(A)*	17 dB(A)*					x	B57-0371
	polystyrene support ***								
BetteSupra	Foot-System				B57-0376			x	B57-0370
	polystyrene support ***								
BetteFloor Caro	Foot-System				B57-0379				B57-0374
BetteFloor Corner	Foot-System				B57-0378				B57-0373
BetteCaro	Foot-System BetteCaro				B57-0379				B57-0374
BetteCorner	Foot-System BetteCorner				B57-0378				B57-0373
BetteQuinta	Foot-System				B57-0376				B57-0370

Technical information and prices of additional BetteExtras on page 270. Subject to alteration and production tolerance. Prices excluding VAT.

Installation planning flush-to-floor showers

Waste fittings			BetteAir	BetteFloor Side	BetteFloor	BetteUltra < 1000 mm	BetteUltra ≥ 1000 mm	BetteSupra
	BetteSolid 50 B598- Drainage capacity 0.6 l/s, Water seal depth 50 mm, quality monitored to DIN EN 274	Installation height waste fitting in mm		68	68	68	68	68
		Total installation height in mm		118	118	113	123	153
	BetteSolid 30 B597- Drainage capacity 0.6 l/s, Water seal depth 30 mm	Installation height waste fitting in mm		48	48	48	48	48
		Total installation height in mm		98	98	93	103	133
	BetteScope B574- Drainage capacity 0,85 l/s, Water seal depth 50 mm, quality monitored to DIN EN 274	Installation height waste fitting in mm		65	65	65	65	65
		Total installation height in mm		115	115	110	120	150
	BetteDown B594- Drainage capacity 0.6 l/s, Water seal depth 50 mm, quality monitored to DIN EN 274	Installation height waste fitting in mm		81	81	81	81	81
		Total installation height in mm		50	50	45	55	85
	BetteAir 50 B525- Drainage capacity 0.6 l/s, Water seal depth 50 mm, Quality-controlled according to EN 274 in accordance with ABP P-4096 TRLP	Installation height waste fitting in mm	68					
		Total installation height in mm	117					
	BetteAir 30 B524- Drainage capacity 0.6 l/s, Water seal depth 30 mm	Installation height waste fitting in mm	48					
		Total installation height in mm	97					
	BetteAir Down B599- Drainage capacity 0.6 l/s, Water seal depth 50 mm, quality-controlled according to EN 274	Installation height waste fitting in mm	81					
		Total installation height in mm	67					

Subject to alteration and production tolerance.

Minimum support Flex

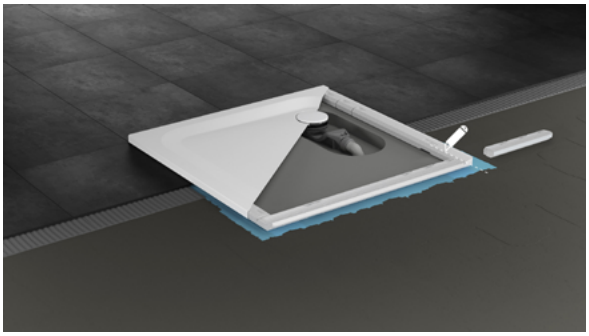

Information

- adapts to individual requirements
- can be combined with BetteFloor, BetteFloor Side and BetteUltra
- extremely light
- saves warehouse space
- ideal for construction and renovations
- suitable for screed or wooden floors
- minimum Installation height from 35 mm
- can be combined with a sealing system
- at only 17 dB(A), it exceeds the higher requirements of sound insulation class 3, VDI 4100 (installation on screed including insulation)

For a seal that complies with the standard, we recommend combination with the installation box Easy Connect (item no. B57-0400) or with the sealing system for minimum tray carriers (item no. B57-0371)

If used with the BetteUpstand, the Flex minimum support can only be used on shower trays with a side length of ≤ 1200 mm, and on the BetteFloor Side shower area, with a side length of < 1200 mm.

Variants

PG	article no.	description	price
IN	B57-0404	Minimum Support Flex for shower trays 25 mm & shower areas	57 €
IN	B57-0405	Minimum Support Flex for shower trays 35 mm	57 €

Technical information and prices of additional BetteExtras on page 270. Subject to alteration and production tolerance. Prices excluding VAT.

Foot-System

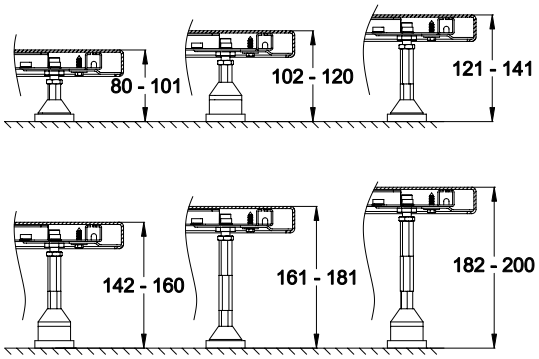

Information

The BetteFoot-System guarantees quick, safe and cost-effective height compensations in the installation of shower trays. For this purpose a frame is clamped under the tray edge into which the height adjustable feet are screwed. In this way the load is distributed over the entire frame and not just at certain points. It is no longer necessary to underpin the shower tray.

Installation height 80 - 200 mm.

For Installation height 205 - 325 mm spacers, art.-no. B50-0005, need to be ordered separately.
Can be combined with BetteUpstand.

Variants

PG	article no.	description	price
IN	B50-3020	Foot-System for Shower tray 700 × 700 mm	179 €
IN	B50-3021	Foot-System for Shower tray 750 × 700 mm	179 €
IN	B50-3031	Foot-System for Shower tray 750 × 750 mm	179 €
IN	B50-3022	Foot-System for Shower tray 800 × 700 mm	179 €
IN	B50-3032	Foot-System for Shower tray 800 × 750 mm	179 €
IN	B50-3041	Foot-System for Shower tray 800 × 800 mm	179 €
IN	B50-3023	Foot-System for Shower tray 850 × 700 mm	179 €
IN	B50-3033	Foot-System for Shower tray 850 × 750 mm	179 €
IN	B50-3070	Foot-System for Shower tray 850 × 850 mm	179 €
IN	B50-3073	Foot-System for Shower tray 900 × 600 mm	179 €
IN	B50-3024	Foot-System for Shower tray 900 × 700 mm	179 €
IN	B50-3034	Foot-System for Shower tray 900 × 750 mm	179 €
IN	B50-3043	Foot-System for Shower tray 900 × 800 mm	179 €
IN	B50-3071	Foot-System for Shower tray 900 × 850 mm	179 €
IN	B50-3051	Foot-System for Shower tray 900 × 900 mm	179 €
IN	B50-3026	Foot-System for Shower tray 1000 × 700 mm	179 €
IN	B50-3036	Foot-System for Shower tray 1000 × 750 mm	179 €
IN	B50-3045	Foot-System for Shower tray 1000 × 800 mm	179 €
IN	B50-3053	Foot-System for Shower tray 1000 × 900 mm	179 €
IN	B50-3064	Foot-System for Shower tray 1000 × 1000 mm	179 €
IN	B50-3037	Foot-System for Shower tray 1050 × 750 mm	179 €
IN	B50-3025	Foot-System for Shower tray 1100 × 700 mm	179 €
IN	B50-3027	Foot-System for Shower tray 1100 × 750 mm	179 €
IN	B50-3047	Foot-System for Shower tray 1100 × 800 mm	179 €
IN	B50-3055	Foot-System for Shower tray 1100 × 900 mm	179 €
IN	B50-3028	Foot-System for Shower tray 1100 × 1000 mm	179 €
IN	B50-3029	Foot-System for Shower tray 1100 × 1100 mm	179 €
IN	B50-3030	Foot-System for Shower tray 1200 × 700 mm	205 €
IN	B50-3040	Foot-System for Shower tray 1200 × 750 mm	205 €
IN	B50-3049	Foot-System for Shower tray 1200 × 800 mm	205 €
IN	B50-3057	Foot-System for Shower tray 1200 × 900 mm	205 €
IN	B50-3074	Foot-System for Shower tray 1200 × 1000 mm	205 €
IN	B50-3035	Foot-System for Shower tray 1200 × 1100 mm	205 €

PG	article no.	description	price
IN	B50-3065	Foot-System for Shower tray 1200 × 1200 mm	205 €
IN	B50-3056	Foot-System for Shower tray 1300 × 700 mm	205 €
IN	B50-3054	Foot-System for Shower tray 1300 × 750 mm	205 €
IN	B50-3060	Foot-System for Shower tray 1300 × 800 mm	205 €
IN	B50-3038	Foot-System for Shower tray 1300 × 900 mm	205 €
IN	B50-3061	Foot-System for Shower tray 1300 × 1000 mm	205 €
IN	B50-3092	Foot-System for Shower tray 1300 × 1300 mm	224 €
IN	B50-3058	Foot-System for Shower tray 1400 × 700 mm	224 €
IN	B50-3059	Foot-System for Shower tray 1400 × 750 mm	224 €
IN	B50-3050	Foot-System for Shower tray 1400 × 800 mm	224 €
IN	B50-3062	Foot-System for Shower tray 1400 × 900 mm	224 €
IN	B50-3039	Foot-System for Shower tray 1400 × 1000 mm	224 €
IN	B50-3093	Foot-System for Shower tray 1400 × 1400 mm	252 €
IN	B50-3075	Foot-System for Shower tray 1500 × 700 mm	224 €
IN	B50-3076	Foot-System for Shower tray 1500 × 750 mm	224 €
IN	B50-3079	Foot-System for Shower tray 1500 × 800 mm	224 €
IN	B50-3077	Foot-System for Shower tray 1500 × 900 mm	224 €
IN	B50-3078	Foot-System for Shower tray 1500 × 1000 mm	224 €
IN	B50-3080	Foot-System for Shower tray 1500 × 1500 mm	252 €
IN	B50-3042	Foot-System for Shower tray 1600 × 700 mm	252 €
IN	B50-3044	Foot-System for Shower tray 1600 × 750 mm	252 €
IN	B50-3066	Foot-System for Shower tray 1600 × 800 mm	252 €
IN	B50-3046	Foot-System for Shower tray 1600 × 900 mm	252 €
IN	B50-3068	Foot-System for Shower tray 1600 × 1000 mm	252 €
IN	B50-3081	Foot-System for Shower tray 1700 × 700 mm	252 €
IN	B50-3082	Foot-System for Shower tray 1700 × 750 mm	252 €
IN	B50-3063	Foot-System for Shower tray 1700 × 800 mm	252 €
IN	B50-3048	Foot-System for Shower tray 1700 × 900 mm	252 €
IN	B50-3089	Foot-System for Shower tray 1700 × 1000 mm	252 €
IN	B50-3069	Foot-System for Shower tray 1800 × 800 mm	252 €
IN	B50-3052	Foot-System for Shower tray 1800 × 900 mm	252 €
IN	B50-3091	Foot-System for Shower tray 1800 × 1000 mm	252 €
IN	B50-3096	Foot-System for Shower tray 1900 × 900 mm	252 €
IN	B50-3097	Foot-System for Shower tray 2000 × 900 mm	252 €

Subject to alteration and production tolerance.

Spacer

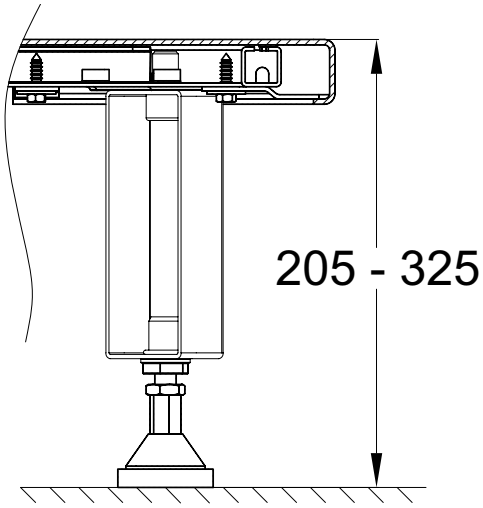

Information

For Installation height 205 - 325 mm spacers, need to be ordered separately. For shower trays up to a side length of 1100 mm we recommend 4 spacers, for a side length of 1200 mm or more we recommend 6 spacers, for a dimension of 1200 x 1200 mm or more we recommend 8 spacers.

Variants

PG	article no.	description	price
IN	B50-0005	Spacer for Shower tray (4 pcs.)	53 €
IN	B50-0006	Spacer for Shower tray (6 pcs.)	73 €
IN	B50-0007	Spacer for Shower tray (8 pcs.)	96 €

Technical information and prices of additional BetteExtras on page 270. Subject to alteration and production tolerance. Prices excluding VAT.

Foot-System BetteCaro

Information

Adjustment range: 80-200 mm.
For Installation height 205 - 325 mm spacers, art.-no. B50-0005, need to be ordered separately.
Can be combined with BetteUpstand.

Variants

PG	article no.	description	price
IN	B51-3041	Foot-System for BetteCaro Shower Tray 800 × 800 mm	210 €
IN	B51-3051	Foot-System for BetteCaro Shower Tray 900 × 900 mm	210 €
IN	B51-3064	Foot-System for BetteCaro Shower Tray 1000 × 1000 mm	210 €

Subject to alteration and production tolerance.

Foot-System BetteCorner

Information

Adjustment range: 80-200 mm.
For Installation height 205 - 325 mm spacers, art.-no. B50-0005, need to be ordered separately.
Can be combined with BetteUpstand.

Variants

PG	article no.	description	price
IN	B52-3034	Foot-System for BetteCorner Shower Tray 750 × 900/900 × 750 mm	202 €
IN	B52-3041	Foot-System for BetteCorner Shower Tray 800 × 800 mm	202 €
IN	B52-3043	Foot-System for BetteCorner Shower Tray 800 × 900/900 × 800 mm	202 €
IN	B52-3051	Foot-System for BetteCorner Shower Tray 900 × 900 mm	202 €
IN	B52-3053	Foot-System for BetteCorner Shower Tray 900 × 1000/1000 × 900 mm	202 €
IN	B52-3064	Foot-System for BetteCorner Shower Tray 1000 × 1000 mm	202 €

Technical information and prices of additional BetteExtras on page 270. Subject to alteration and production tolerance. Prices excluding VAT.

Foot-System for BetteFloor

Information

The BetteFoot-System guarantees quick, safe and cost-effective height compensations in the installation of shower trays. For this purpose a frame is clamped under the tray edge into which the height adjustable feet are screwed. In this way the load is distributed over the entire frame and not just at certain points. It is no longer necessary to underpin the shower tray.

Installation height 80 - 200 mm.

For Installation height 205 - 325 mm spacers, art.-no. B50-0005, need to be ordered separately.

Variants

PG	article no.	description	price
IN	B50-3141	Foot-System BetteFloor 800 × 800 mm	280 €
IN	B50-3124	Foot-System BetteFloor 900 × 700 mm	280 €
IN	B50-3134	Foot-System BetteFloor 900 × 750 mm	280 €
IN	B50-3143	Foot-System BetteFloor 900 × 800 mm	280 €
IN	B50-3151	Foot-System BetteFloor 900 × 900 mm	280 €
IN	B50-3126	Foot-System BetteFloor 1000 × 700 mm	280 €
IN	B50-3136	Foot-System BetteFloor 1000 × 750 mm	280 €
IN	B50-3145	Foot-System BetteFloor 1000 × 800 mm	280 €
IN	B50-3153	Foot-System BetteFloor 1000 × 900 mm	280 €
IN	B50-3164	Foot-System BetteFloor 1000 × 1000 mm	280 €
IN	B50-3127	Foot-System BetteFloor 1100 × 750 mm	280 €
IN	B50-3147	Foot-System BetteFloor 1100 × 800 mm	280 €
IN	B50-3155	Foot-System BetteFloor 1100 × 900 mm	280 €
IN	B50-3128	Foot-System BetteFloor 1100 × 1000 mm	280 €
IN	B50-3130	Foot-System BetteFloor 1200 × 700 mm	307 €
IN	B50-3140	Foot-System BetteFloor 1200 × 750 mm	307 €
IN	B50-3149	Foot-System BetteFloor 1200 × 800 mm	307 €
IN	B50-3157	Foot-System BetteFloor 1200 × 900 mm	307 €
IN	B50-3174	Foot-System BetteFloor 1200 × 1000 mm	307 €
IN	B50-3165	Foot-System BetteFloor 1200 × 1200 mm	307 €
IN	B50-3154	Foot-System BetteFloor 1300 × 750 mm	307 €
IN	B50-3160	Foot-System BetteFloor 1300 × 800 mm	307 €
IN	B50-3138	Foot-System BetteFloor 1300 × 900 mm	307 €
IN	B50-3161	Foot-System BetteFloor 1300 × 1000 mm	307 €

PG	article no.	description	price
IN	B50-3158	Foot-System BetteFloor 1400 × 700 mm	335 €
IN	B50-3159	Foot-System BetteFloor 1400 × 750 mm	335 €
IN	B50-3150	Foot-System BetteFloor 1400 × 800 mm	335 €
IN	B50-3162	Foot-System BetteFloor 1400 × 900 mm	335 €
IN	B50-3139	Foot-System BetteFloor 1400 × 1000 mm	335 €
IN	B50-3184	Foot-System BetteFloor 1400 × 1200 mm	335 €
IN	B50-3175	Foot-System BetteFloor 1500 × 700 mm	335 €
IN	B50-3176	Foot-System BetteFloor 1500 × 750 mm	335 €
IN	B50-3179	Foot-System BetteFloor 1500 × 800 mm	335 €
IN	B50-3177	Foot-System BetteFloor 1500 × 900 mm	335 €
IN	B50-3178	Foot-System BetteFloor 1500 × 1000 mm	335 €
IN	B50-3185	Foot-System BetteFloor 1500 × 1200 mm	335 €
IN	B50-3142	Foot-System BetteFloor 1600 × 700 mm	335 €
IN	B50-3144	Foot-System BetteFloor 1600 × 750 mm	335 €
IN	B50-3166	Foot-System BetteFloor 1600 × 800 mm	335 €
IN	B50-3146	Foot-System BetteFloor 1600 × 900 mm	335 €
IN	B50-3168	Foot-System BetteFloor 1600 × 1000 mm	335 €
IN	B50-3183	Foot-System BetteFloor 1600 × 1200 mm	335 €
IN	B50-3182	Foot-System BetteFloor 1700 × 750 mm	335 €
IN	B50-3163	Foot-System BetteFloor 1700 × 800 mm	335 €
IN	B50-3148	Foot-System BetteFloor 1700 × 900 mm	335 €
IN	B50-3189	Foot-System BetteFloor 1700 × 1000 mm	335 €
IN	B50-3169	Foot-System BetteFloor 1800 × 800 mm	335 €
IN	B50-3152	Foot-System BetteFloor 1800 × 900 mm	335 €
IN	B50-3191	Foot-System BetteFloor 1800 × 1000 mm	335 €

Subject to alteration and production tolerance.

Foot-System for BetteFloor Caro

Information

The BetteFoot-System guarantees quick, safe and cost-effective height compensations in the installation of shower trays. For this purpose a frame is clamped under the tray edge into which the height adjustable feet are screwed. In this way the load is distributed over the entire frame and not just at certain points. It is no longer necessary to underpin the shower tray.

Installation height 80 - 200 mm.

For Installation height 205 - 325 mm spacers, art.-no. B50-0005, need to be ordered separately.

Variants

PG	article no.	description	price
IN	B51-3151	Foot-System for BetteFloor Caro 900 × 900 mm	324 €
IN	B51-3164	Foot-System for BetteFloor Caro 1000 × 1000 mm	324 €

Technical information and prices of additional BetteExtras on page 270. Subject to alteration and production tolerance. Prices excluding VAT.

Foot-System for BetteFloor Corner

Information

The BetteFoot-System guarantees quick, safe and cost-effective height compensations in the installation of shower trays. For this purpose a frame is clamped under the tray edge into which the height adjustable feet are screwed. In this way the load is distributed over the entire frame and not just at certain points. It is no longer necessary to underpin the shower tray.

Installation height 80 - 200 mm.

For Installation height 205 - 325 mm spacers, art.-no. B50-0005, need to be ordered separately.

Variants

PG	article no.	description	price
IN	B52-3151	Foot-System for BetteFloor Corner 900 × 900 mm	259 €
IN	B52-3164	Foot-System for BetteFloor Corner 1000 × 1000 mm	259 €

Subject to alteration and production tolerance.

Technical information and prices of additional BetteExtras on page 270. Subject to alteration and production tolerance. Prices excluding VAT.

Sealing System

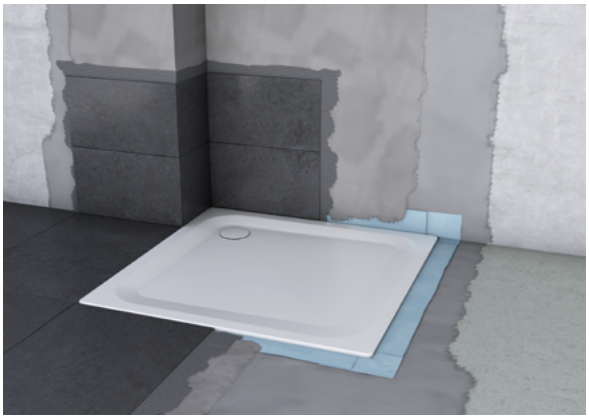

Waterproof
ETAG 022
DIN 18534

Information

- waterproof installation
- wall seal for baths and shower trays
- also suitable for flush-to-floor installation of shower trays and shower areas
- pre-assembled corner elements for fast, safe installation
- Sealing tapes are particularly flexible and adaptable

Scope of delivery

2 x Sealing Fleece 1,80 m
2 x Sealing Fleece 2,00 m
4 x Sealing Corners 90°
2 x Outside-corner
2 x 90° Outside-corner
Including sound insulation & tile separator strip

Certification

For standard wall sealing according to DIN 18534-1.

Variants

PG	article no.	description	price
IN	B57-0370	Sealing System for rectangular shower trays	110 €
IN	B57-0371	Sealing System for Minimum Support	110 €
IN	B57-0372	Sealing System for baths	106 €
IN	B57-0373	Sealing System for Corner shower trays	121 €
IN	B57-0374	Sealing System for Caro shower trays	121 €
IN	B57-0375	Sealing system onto wooden floor	142 €

Subject to alteration and production tolerance.

Sealing Set for BetteUpstands Installation Flush-to-Floor

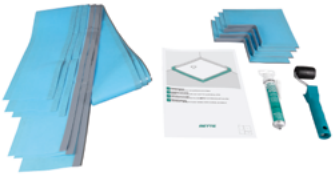

Information

- Waterproof installation
- Suitable for the flush-to-floor installation of shower trays with BetteUpstand.
- Pre-fabricated corner elements for fast, safe installation
- Sealing tapes are particularly flexible and adaptable

Scope of delivery:
3x sealing tape 1.80 m
4x sealing corners 90°

Certification

For standard sealing according to DIN 18534-1.

PG	article no.	description	price
IN	B57-0080	Sealing Set BetteUpstand installation flush-to-floor	107 €

Technical information and prices of additional BetteExtras on page 270. Subject to alteration and production tolerance. Prices excluding VAT.

Foam Central Support System

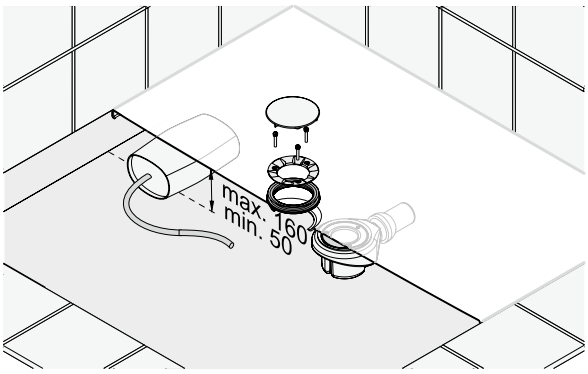

Information

Additional central support for BetteFloor, BetteFloor Side and BetteUltra.

Special advantage: belated installation via waste hole possible.

Scope of delivery:
1 pc.

PG	article no.	description	price
IN	B57-0230	Foam Central Support System	86 €

Subject to alteration and production tolerance.

Bath divider

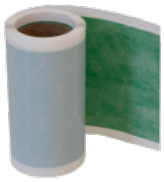

Information

Very stretchy, tearproof nonwoven/foil combination for defined separation between the bathroom product and the on-site substructure. Mineral adhesives achieve the optimum bond with the incorporated nonwoven.

PG	article no.	description	price
IN	B57-0407	Bath divider 3300 × 120 mm	33 €

Sound insulation set

Information

Installation acc. to DIN 4109/A1
Decouples sound to the wall, floor and brickwork.

PG	article no.	description	price
IN	B57-0100	Sound insulation set for baths	245 €
IN	B57-0110	Sound insulation set for BettePool	236 €
IN	B57-0120	Sound insulation set for shower trays	236 €

Technical information and prices of additional BetteExtras on page 270. Subject to alteration and production tolerance. Prices excluding VAT.

Wall Brackets

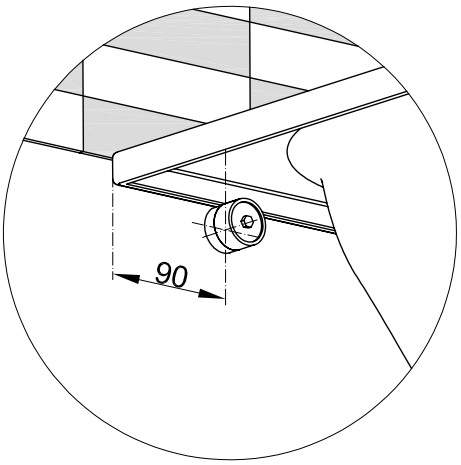

Information

Bath anchors with integrated sound insulation for wall mounting baths and shower trays.

The set contains the three anchors recommended for installation.

PG	article no.	description	price
IN	Z0008669	Wall Brackets	40 €

Subject to alteration and production tolerance.

Unslotted Waste

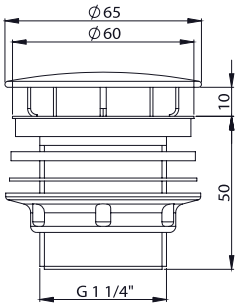

Information

Our washbasins are optionally available with the Unslotted Waste 1¼".

Scope of delivery:
1 hair trap

PG	article no.	description	price
IN	B580-901	Unslotted Waste 1¼ ", chrome	74 €
IN	B580-000	Unslotted Waste 1¼ ", enamelled, White	120 €
IN	B580-001	Unslotted Waste 1¼ ", enamelled, Pergamon	120 €
IN	B580-002	Unslotted Waste 1¼ ", enamelled, Manhatten	120 €
IN	B580-003	Unslotted Waste 1¼ ", enamelled, Bahama beige	120 €
IN	B580-004	Unslotted Waste 1¼ ", enamelled, Edelweiss	120 €
IN	B580-006	Unslotted Waste 1¼ ", enamelled, Jasmin	120 €
IN	B580-035	Unslotted Waste 1¼ ", enamelled, Ebony	120 €
IN	B580-056	Unslotted Waste 1¼ ", enamelled, Black	120 €
IN	B580-400	Unslotted Waste 1¼ ", enamelled, Raven	120 €
IN	B580-401	Unslotted Waste 1¼ ", enamelled, Anthracite	120 €
IN	B580-402	Unslotted Waste 1¼ ", enamelled, Slate	120 €
IN	B580-403	Unslotted Waste 1¼ ", enamelled, Smoke	120 €
IN	B580-404	Unslotted Waste 1¼ ", enamelled, Graphite	120 €
IN	B580-410	Unslotted Waste 1¼ ", enamelled, Silver	120 €
IN	B580-412	Unslotted Waste 1¼ ", enamelled, Quartz	120 €
IN	B580-413	Unslotted Waste 1¼ ", enamelled, Dust	120 €
IN	B580-414	Unslotted Waste 1¼ ", enamelled, Flint	120 €
IN	B580-415	Unslotted Waste 1¼ ", enamelled, Cashmere	120 €
IN	B580-416	Unslotted Waste 1¼ ", enamelled, Stone	120 €
IN	B580-417	Unslotted Waste 1¼ ", enamelled, Hazel	120 €
IN	B580-422	Unslotted Waste 1¼ ", enamelled, Beige	120 €
IN	B580-423	Unslotted Waste 1¼ ", enamelled, Flax	120 €
IN	B580-424	Unslotted Waste 1¼ ", enamelled, Sand	120 €
IN	B580-425	Unslotted Waste 1¼ ", enamelled, Greige	120 €
IN	B580-430	Unslotted Waste 1¼ ", enamelled, Coffee	120 €
IN	B580-434	Unslotted Waste 1¼ ", enamelled, Ebano	120 €
IN	B580-438	Unslotted Waste 1¼ ", enamelled, Taupe	120 €
IN	B580-439	Unslotted Waste 1¼ ", enamelled, Cacao	120 €
IN	B580-440	Unslotted Waste 1¼ ", enamelled, Snow	120 €
IN	B580-441	Unslotted Waste 1¼ ", enamelled, Cream	120 €
IN	B580-418	Unslotted Waste 1¼ ", enamelled, Blue Satin	120 €
IN	B580-790	Unslotted Waste 1¼ ", enamelled, Midnight	120 €
IN	B580-788	Unslotted Waste 1¼ ", enamelled, Daylight	120 €
IN	B580-791	Unslotted Waste 1¼ ", enamelled, Forest	120 €

Subject to alteration and production tolerance.

Glazed outlet cover Ø 65 mm for Unslotted Waste

Information

In glazed titanium steel.

Available in White, all the Exclusive colours, effect colours and Pergamon 001, Manhattan 002, Bahama Beige 003, Edelweiss 004, Jasmin 006, Ebony 035 and Black 056

PG	article no.	description	price
CP	Y101-	Glazed outlet cover Ø 65 mm for Unslotted Waste	56 €

Spare cover

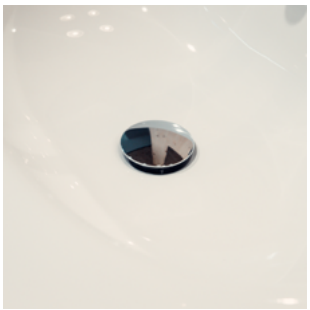

PG	article no.	description	price
CP	Z0013794	Washbasin Spare cover, chrome	32 €

Technical information and prices of additional BetteExtras on page 270. Subject to alteration and production tolerance. Prices excluding VAT.

Pushwaste

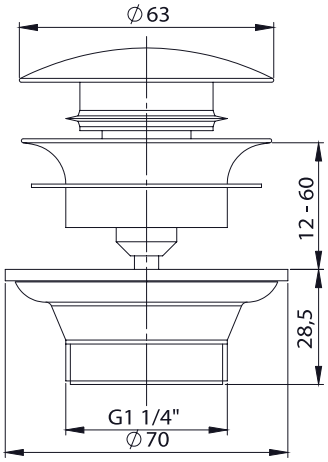

Information

For Bette washbasins with overflow are 1¼" push wastes available.

PG	article no.	description	price
IN	B581-000	Pushwaste 1 ¼ ", White varnished	122 €
IN	B581-901	Pushwaste 1 ¼ ", chrome	95 €

Overflow cover

Information

Compatible with Bette washbasins overflow sets. Suitable as a replacement for the chrome overflow cover.

Scope of delivery:
Overflow cover, White lacquered
Sealing set for overflow cover
Assembly tool for overflow cover

PG	article no.	description	price
CP	Z0019886	Overflow cover, White lacquered	22 €

Subject to alteration and production tolerance.

Waste- and overflow fitting BetteFlow

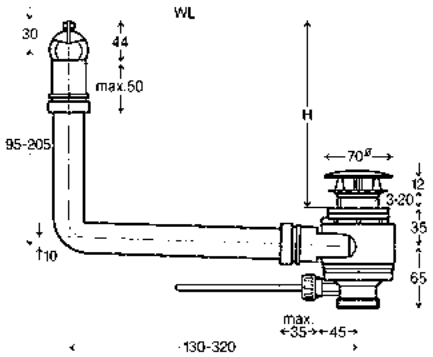

Information

Waste- and overflow fitting for washbasins without overflow, operation via lever rod. Length and height can be adapted to suit the washbasin.

PG	article no.	description	price
IN	B616-901	Waste- and overflow fitting BetteFlow, chrome	94 €
IN	B616-000	Waste- and overflow fitting BetteFlow, White	106 €

Technical information and prices of additional BetteExtras on page 270. Subject to alteration and production tolerance. Prices excluding VAT.

Grips

Grips B060

PG	article no.	suitable for	Chrome 901
IN	B060-	BetteStep	305 €

Scope of delivery:
2 pcs.

Grips B080

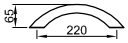

PG	article no.	suitable for	Chrome 901
IN	B080-	BetteClassic	224 €
		BetteComodo	
		BetteComodo with side overflow	
		BetteForm	
		BetteOne Relax	
		BetteSelect	
		LaBette	

Scope of delivery:
2 pcs.

Subject to alteration and production tolerance.

Grips

Grip B090

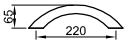

PG	article no.	suitable for	Chrome 901
IN	B090-	BetteBambino	178 €
		BetteDuett	
		BetteDuo	
		BetteLoft	
		BetteLuna	
		BetteOcean	
		BetteOcean Low-Line	
		BetteOne	
		BetteSelect Duo	
		BetteSelect with side overflow	
		BetteSpace L	
		BetteSpace M	
		BetteSpace S	
		BetteStarlet	
		BetteStarlet I	
		BetteStarlet I Silhouette	
		BetteStarlet II	
		BetteStarlet IV	
		BetteStarlet IV Silhouette	
		BetteStarlet V	
		BetteStarlet V Silhouette	
		BetteStarlet Hexa	
		BetteStarlet Flair Oval	
		BetteStarlet Oval	
		BetteStarlet Oval Silhouette	
		BetteStarlet Spirit	

Scope of delivery:
1 pc.

Grips B110

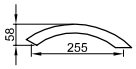

PG	article no.	suitable for	Chrome 901
IN	B110-	BetteSet	224 €

Scope of delivery:
2 pcs.

Technical information and prices of additional BetteExtras on page 270. Subject to alteration and production tolerance. Prices excluding VAT.

Grips

Grip B120

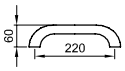

PG	article no.	suitable for	Chrome 901
IN	B120-	BetteBambino	178 €
		BetteDuett	
		BetteDuo	
		BetteLoft	
		BetteLuna	
		BetteOcean	
		BetteOcean Low-Line	
		BetteOne	
		BetteSelect Duo	
		BetteSelect with side overflow	
		BetteSpace L	
		BetteSpace M	
		BetteSpace S	
		BetteStarlet	
		BetteStarlet I	
		BetteStarlet I Silhouette	
		BetteStarlet II	
		BetteStarlet IV	
		BetteStarlet IV Silhouette	
		BetteStarlet V	
		BetteStarlet V Silhouette	
		BetteStarlet Hexa	
		BetteStarlet Flair Oval	
		BetteStarlet Oval	
		BetteStarlet Oval Silhouette	
		BetteStarlet Spirit	

Scope of delivery:
1 pc.

Grips B122

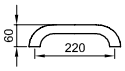

PG	article no.	suitable for	Chrome 901
IN	B122-	BetteClassic	233 €
		BetteComodo	
		BetteComodo with side overflow	
		BetteForm	
		BetteOne Relax	
		BetteSelect	
		LaBette	

Scope of delivery:
2 pcs.

Subject to alteration and production tolerance.

Blind Plug for Grip Holes

Scope of delivery:
1 pc.

PG	article no.	description	price
CP	B970-901	Blind Plug chrome	22 €

Technical information and prices of additional BetteExtras on page 270. Subject to alteration and production tolerance. Prices excluding VAT.

LED-Colour Spot Light

Information

-Set of two spotlights factory fitted on both long sides of the bath
- The LED-Colour Spot Lights are capable of displaying the complete RGB colour spectrum
- Operation via control pad inside the bath

PG	article no.	description	price
IN	B465-901	LED-Colour Spot Light, chrome	1.248 €
IN	B465-000	LED-Colour Spot Light, White	1.354 €
IN	B465-903	LED-Colour Spot Light, gold finish	1.597 €

Disinfection

Information

- For thorough disinfection to prevent bacteria forming, especially in the concealed pipes in whirlsystems.
- Depending on use, disinfection is recommended every 2-4 weeks.
- Using the recommended disinfection liquid, the unit is filled via the visible opening on the upper part of the bath.
- To begin the disinfection procedure, the bath is filled with hot water until all jets are submerged.
- The disinfection process will start by pressing the disinfection button.
- Once the disinfection process has been completed, the bath should be rinsed thoroughly.

PG	article no.	description	price
IN	B480-901	Disinfection unit, chrome	2.644 €
IN	B480-000	Disinfection unit , White	2.902 €
IN	B480-903	Disinfection unit, gold finish	3.461 €

Subject to alteration and production tolerance.

BetteRelax

Information

The ergonomically designed bath cushion provides pleasant support for the head, neck, arms or feet. Thanks to the integrated magnets you can accurately position the bath cushion BetteRelax anywhere you want.
Dimension: 340 × 120 × 45 mm.

Use of the BetteRelax bath cushion is not recommended for people with a heart pacemaker or implanted defibrillator.

PG	article no.	description	price
CP	B57-0213	BetteRelax, black, 1 piece	136 €
CP	B57-0212	BetteRelax, black, 2 pieces	226 €
CP	B57-0211	BetteRelax, White, 1 piece	136 €
CP	B57-0210	BetteRelax, White, 2 pieces	226 €

Technical information and prices of additional BetteExtras on page 270. Subject to alteration and production tolerance. Prices excluding VAT.

Enamel Spray Cleaner

Information

Spray cleaner with beading action for glazed titanium steel. For the gentle cleaning and care for BetteGlaze®, BetteGlaze® Plus, BetteAnti-Slip, BetteAnti-Slip Pro and BetteAnti-Slip Sense, finishes.

Use:
Spray on the enamel cleaner and leave to work for a few moments. Then rub well over the surface using a soft, wet cloth. Rinse with warm water and wipe dry.

PG	article no.	description	price
CP	B57-0245	Enamel Spray Cleaner	10 €

Enamel Cleaner

Information

Gentle cleaning and care of the surfaces: BetteGlaze®, BetteAnti-slip, BetteAnti-slip Pro.

Use:
Apply enamel cleaner onto the moistened surface, and gently rub over with a soft cloth. Rinse with warm water and wipe dry. If using on matt colours and the BetteAntislip finish, wet the surface generously with plenty of water. Use a damp cloth to rub in the cleaner gently, and rinse off with hot water.

PG	article no.	description	price
CP	Z0015908	Enamel Cleaner Paste 100 ml	10 €

Subject to alteration and production tolerance.

Care Cloth

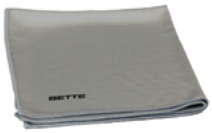

Information

Gentle cleaning and care of the surfaces: BetteGlaze®, BetteGlaze® Plus, BetteAntislip, BetteAntislip Pro, BetteAntislip Sense

Use:
The BetteCareCloth is ideal for the daily care and cleaning of our bathroom elements in glazed titanium steel.

PG	article no.	description	price
CP	Z0016912	Care Cloth	8 €

Bath Rubber

Information

Gentle cleaning and care of the surfaces: BetteGlaze®.

Use:
For stubborn deposits and dirt, simply wet the area with plenty of water and rub the enamel care pen over it repeatedly while still wet. Not suitable for matt Colours, BetteGlaze® Plus and BetteAnti-Slip Sense.

PG	article no.	description	price
CP	Z0007521	Bath rubber	7 €

Technical information and prices of additional BetteExtras on page 270. Subject to alteration and production tolerance. Prices excluding VAT.

Remalle

Information

Repair paint to touch up damaged enamel.

Remalle is available in 8ml tubes.

Available in White, selected sanitary and the Exclusive colours. Please contact us.

PG	article no.	description	price
CP	B270-000	Remalle White	11 €

Disinfection liquid 500 ml

Information

The disinfection liquid is a sterilising agent for whirlsystems, which is free from chlorine and formaldehyde. When used at regular intervals it provides preventative protection against germs and algae. The liquid also provides protection against legionella pneumophila and most bacterias, viruses and moulds.

PG	article no.	description	price
CP	Z0008621	Disinfection liquid 500 ml	52 €

Subject to alteration and production tolerance.

BetteLux Shape Accessoires

Information

Design: Tesseraux + Partner

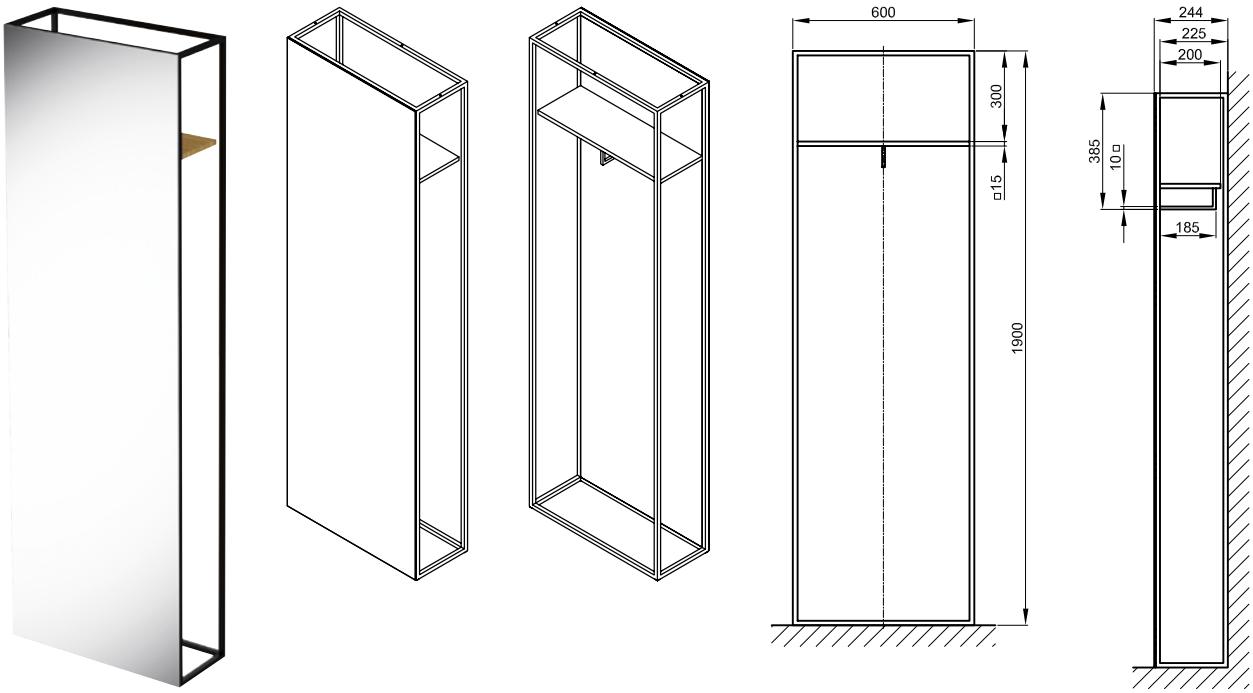

Standing Mirror

- Wall mounting
- with high-quality real-wood veneer rear panel
- incl. shelf and hook

Scope of delivery

- incl. shelf, hook and fastening material

PG	article no.	dimensions in mm	description	White matt 807 Black matt 815 → cover
IN	Q050 FH814	600 × 244 × 1900	Standing Mirror with rear panel oak nature 814	2.024 €

Please note the ordering information on page 5.

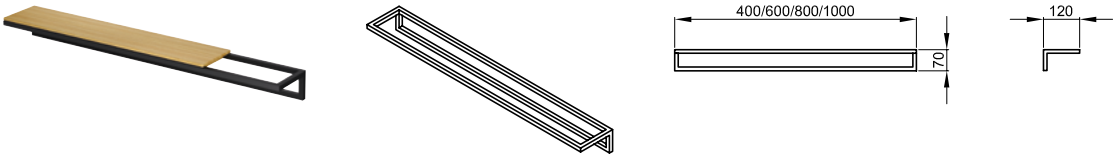

Towel Rail

The wooden inlay can be ordered separately.

Scope of delivery

- incl. fastening material

PG	article no.	dimensions in mm	description	White matt 807 Black matt 815 → cover
IN	Q030	400 × 120 × 70	Towel Rail 400 mm	424 €
IN	Q031	600 × 120 × 70	Towel Rail 600 mm	424 €
IN	Q032	800 × 120 × 70	Towel Rail 800 mm	440 €
IN	Q033	1000 × 120 × 70	Towel Rail 1000 mm	440 €

Subject to alteration and production tolerance.

BetteLux Shape Accessoires

Information

Design: Tesseraux + Partner

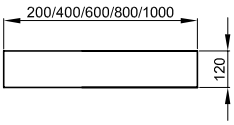

Wooden Inserts

PG	article no.	dimensions in mm	description	oak nature 814 → cover
IN	Q040	200 × 120 × 19	Wooden Slat for Towel Rail, 200 mm	141 €
IN	Q041	400 × 120 × 19	Wooden Slat for Towel Rail, 400 mm	146 €
IN	Q042	600 × 120 × 19	Wooden Slat for Towel Rail, 600 mm	183 €
IN	Q043	800 × 120 × 19	Wooden Slat for Towel Rail, 800 mm	223 €
IN	Q044	1000 × 120 × 19	Wooden Slat for Towel Rail, 1000 mm	238 €

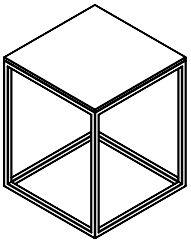
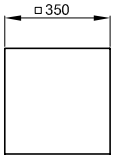

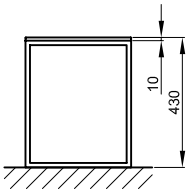

Stool

- Dimension: 350 x 350 x 430 mm
- incl. real-wood covering

PG	article no.	dimensions in mm	description	White matt 807 Black matt 815 → cover
IN	Q020 FH814	350 × 350 × 430	Stool with real-wood covering oak nature 814	666 €

Please note the ordering information on page 5.

Technical information and prices of additional BetteExtras on page 270. Subject to alteration and production tolerance. Prices excluding VAT.

Whirlsystems

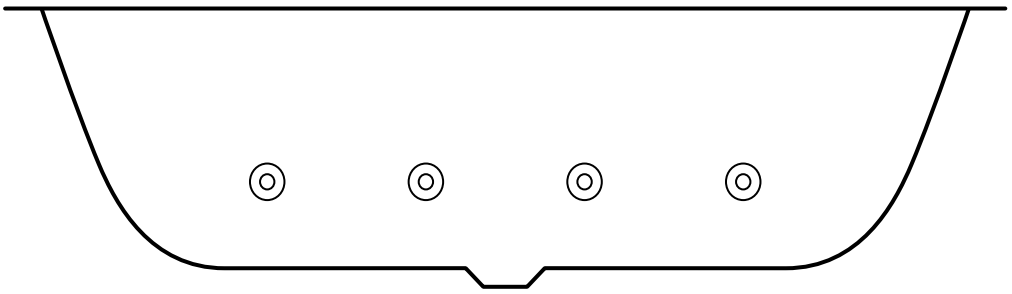

Subject to alteration and production tolerance.

382 BetteAirjet Plus Whirlsystem
383 BetteJet Whirlsystem
384 BetteSpa Whirlsystem

Subject to alteration and production tolerance.

Whirlsystems

Feature

description	Airjet Plus	Jet	Spa
Feature	Air + water	Water	Air
Side jets (water)	8	8	
Base jets (air)	12		12/18
Micro jets in the shoulder area	5		
Micro jets in the reflexology area	2/5 on Duo baths		
Individual direction of massage spray	x	x	
Regulation of air supply via control pad	x		x
Continuous regulation of the air mixture	x	x	
Massage via air supply			x
Massage via water spray or optionally water-air mix	x	x	
Integrated control elements in the bath interior	x	x	x
Preheating air system	x		x
Dry-run protection via level controller	x	x	

Operation

description	Airjet Plus	Jet	Spa
Interval function	x	x	x
Electronically controlled	x	x	x
Keypad to control all the functions	x	x	x
Continuous adjustment of intensity	x	x	x

Hygienic

description	Airjet Plus	Jet	Spa
Integrated residual water drainage system	x	x	x
Automatic dry-blowing function	x		
Manual dry-blowing function			x

Subject to alteration and production tolerance.

Whirlsystems

Output

description	Airjet Plus	Jet	Spa
Rated output water pump	1100 W	800 W	
Rated output blower incl. preheating	1050 W		1050 W

Mounting height

description	Airjet Plus	Jet	Spa
Mounting height of waste fitting Rotaplex included sealings	160 mm	160 mm	140 mm
Mounting height of waste fitting spring tap included sealings	170 mm	170 mm	170 mm

Optional features

description	Airjet Plus	Jet	Spa
BetteDisinfection	x	x	x
LED-Colour Spot Lights	x	x	x
Pop-up waste with integrated inlet	x	x	x

Subject to alteration and production tolerance.

BetteAirjet Plus Whirlsystem

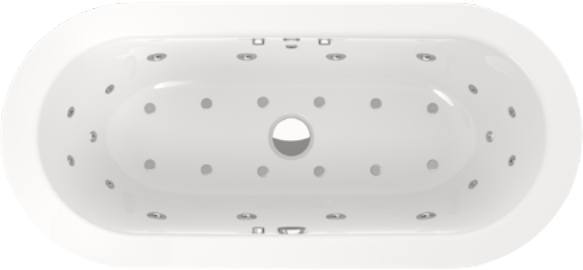

Information

Combination of up to 12 air jets in the floor, 8 water jets in the side and microjets at the head- and foot end of the bath.

An inspection gap of at least 79 cm^2 must be left on installation to allow for the air intake.

All baths are delivered with a height-adjustable frame.

The scope of delivery includes a waste fitting.

All baths with a whirlsystem will be delivered with a 90 mm diameter drain hole.

Please refer to the "Extras overview" for the exact combination options of our baths and the system.

State code "AJETP" when ordering the bath. The appropriate accessories must be ordered under a separate position.

Surface colours

PG	article no.	Colours	price
IN	B350-901	Chrome 901	7.973 €
IN	B350-000	White 000	9.452 €
IN	B350-903	gold finish 903	12.037 €

Waste- and overflow fittings

PG	code	description	price
EX	RT	Rotaplex Trio	334 €

Accessories

PG	Article no.	Description	Chrome 901	White 000	Gold finish 903
IN	B465-	LED-Colour Spot Light (2 pieces)	1.248 €	1.354 €	1.597 €
IN	B480-	Disinfection	2.644 €	2.902 €	3.461 €

PG	article no.	description	price
CP	Z0008621	Disinfection liquid 500 ml	52 €

Subject to alteration and production tolerance.

BetteJet Whirlsystem

Information

Water System with 8 adjustable jets integrated into the sides.

All baths are delivered with a height-adjustable frame.

The scope of delivery includes a waste fitting.

All baths with a whirlsystem will be delivered with a 90 mm diameter drain hole.

Please refer to the "Extras overview" for the exact combination options of our baths and the system.

State code "JET" when ordering the bath. The appropriate accessories must be ordered under a separate position.

Surface colours

PG	article no.	Colours	price
IN	B380-901	Chrome 901	4.140 €
IN	B380-000	White 000	4.681 €
IN	B380-903	gold finish 903	5.732 €

Waste- and overflow fittings

PG	code	description	price
EX	RT	Rotaplex Trio	334 €

Accessories

PG	Article no.	Description	Chrome 901	White 000	Gold finish 903
IN	B465-	LED-Colour Spot Light (2 pieces)	1.248 €	1.354 €	1.597 €
IN	B480-	Disinfection	2.644 €	2.902 €	3.461 €

PG	article no.	description	price
CP	Z0008621	Disinfection liquid 500 ml	52 €

Subject to alteration and production tolerance.

BetteSpa Whirlsystem

Information

Up to 12 air jets integrated in the floor of the bath.

An inspection gap of at least 79 cm^2 must be left on installation to allow for the air intake.

All baths are delivered with a height-adjustable frame.

The scope of delivery includes a waste fitting.

All baths with a whirlsystem will be delivered with a 90 mm diameter drain hole.

Please refer to the "Extras overview" for the exact combination options of our baths and the system.

State code "SPA" when ordering the bath. The appropriate accessories must be ordered under a separate position.

Surface colours

PG	article no.	Colours	price
IN	B370-901	Chrome 901	3.674 €
IN	B370-000	White 000	4.167 €
IN	B370-903	gold finish 903	5.114 €

Waste- and overflow fittings

PG	code	description	price
EX	RT	Rotaplex Trio	334 €

Accessories

PG	Article no.	Description	Chrome 901	White 000	Gold finish 903
IN	B465-	LED-Colour Spot Light (2 pieces)	1.248 €	1.354 €	1.597 €
IN	B480-	Disinfection	2.644 €	2.902 €	3.461 €

PG	article no.	description	price
CP	Z0008621	Disinfection liquid 500 ml	52 €

Subject to alteration and production tolerance.

Subject to alteration and production tolerance.

Bette Branches - Europe

Headquarter

Bette GmbH & Co. KG
Heinrich-Bette-Straße 1
33129 Delbrück
Germany
T +49 5250 511-0
F +49 5250 511-130
international@bette.de

Bette GmbH & Co. KG UK Branch Office 2
Unit 3
The Courtyard
Church Street
Lockington
Derbyshire
DE74 2SL
United Kingdom
T +44 844 800 0547
info@bette.co.uk

OOO „BETTE"
Leningradsky Ave, 15
Bldg. 9, floor 6
125040 Moscow
Russia
T +7 (495) 565-39-10

Bette Agencies Europe

Croatia

Local representative:
SPINA d.o.o.
M. Vlasica 43 a
52440 Porec
T +385 52451348
info@spina.hr
www.spina.hr

Estonia
Latvia
Lithuania

Local representative:
MB „Akvozama“
Vytautas Zamalaitis
Vytauto gatve 46A
Trakai, 21112
Lithuania
T +370 686 49 852
v.zamalaitis@gmail.com

Hungary

Local representative:
Junitim Studio Kft.
Bujdosóné Mihavetz, Beatrix
1145 Budapest
T +36 302252565
F +36 12480553
info@junitim.hu
www.junitim.hu

Poland

Local representative:
Luxury Bathroom
Grzegorz Chorzyński
ul. Bajana 9A / 37
01-904 Warszawa
T +48 501496900
g.chorzynski@gmail.com
www.luxurybathroom.pl

Portugal

Local representative:
DIVITEK
Diego Laranjo
T: +351 919946938
dlaranjo@divitek.pt

Romania
Bulgaria

Local representative:
Reallize Consult
Sönke Martin
0013132 Bukarest
T +40 722654654
martin@sm.ro

Turkey

Local representative:
CASABLANCA – KURT YAPI Insaat Tekstil
San. Ve Tic. LTD. STI.
Recep Peker Cad. No.9 Kurt Apt 81030 Kiziltoprak
Istanbul
T +90 216 418 15 13
F +90 216 418 13 96
casablanca@banyo.net
www.banyo.net

Iceland

Local representative:
Byko HF
Skemmuvegi 2 A
200 KOPAVOGUR
Iceland
byko@byko.is
www.byko.is

Bette Branches - Overseas

Bette (Shanghai) Co., Ltd.
RM.810
Shang Guang Jin Zuo
407 Yi Shan Rd.
Shanghai 200030
China
T +86 21 64228706
bette-china@bette.de

Bette Bathroom Products Pte. Ltd.
25 International Business Park
German Centre, #03-79
609916 Singapore
T +65 94564482
caroline.fang@bette.sg

Bette Agencies - Overseas

Australia

Local representative:
Argent Australia Pty Ltd
18 Wandoo Street
Fortitude Valley, Qld 4006
T +61 1300 364 748
F +61 1300 656 057
ac@argentaust.com.au
www.argentaust.com.au

India

Local representative:
Zalur Lifestyle Private Limited
N020/804, HILLS AND DALES, PHASE 3
S.R.NO 13,15 ,UNDRI
PUNE, MAHARASHTRA, 411028
T +91 9987 4842 80
rahul.kher@zalurlifestyle.com

Israel

Local representative:
Albus Ltd.
8 - 10 Hamelacha
48091 Rosh Haayin
T +972 3 6323651
info@albus.co.il
www.albus.co.il

Middle East

Local representative:
TAPS & MORE MARKETING CONSULTANTS
P.O.BOX 75833
Dubai
United Arab Emirates
T +971 4 3250010
F +971 4 3250490
tapman@emirates.net.ae
www.tapsmore.com

New Zealand

Local representative:
FRANKLIN
Stadium Drive 24, Pukekohe 2340
Auckland
T +64 9 238 9179
F +64 9 238 4128
info@franklins.co.nz
www.franklins.co.nz

South Africa

Local representative:
DISTINCT Collection
56 Durban Street
2001 Johannesburg
T +27 11 3348100
info@distinctcollection.co.za
www.distinctcollection.co.za

Canada

Local representative:
STAX SPECIALTY HARDWARE STUDIO
144 Thompson Avenue
Etobicoke, Ontario, M8Z3V2
T +1 416 433 0928
hello@staxshs.com
www.staxshs.com

Vietnam

Local representative:
USI JOINT STOCK COMPANY
No. A25-A26, Tan Phong
Kim Son Residence
Tan Phong Ward, District 7, HCMC
T +84 19000378

§ 1 Scope of application

These General Terms and Conditions (hereinafter also referred to as GTC) shall apply to all contracts of sale concluded between us (hereinafter also referred to as Seller) and you as our customer (hereinafter also referred to as Buyer or Last Seller) in accordance with § 1 number 2 of these GTC. The GTC apply exclusively to companies pursuant to § 14 BGB (German Civil Code) or merchants pursuant to § 1 ff HGB (German Commercial Code) as customers. These conditions, which can also be accessed at any time on the Internet at www.my-bette.com or made available on written request, apply to all present and future contracts and business relationships between Seller and Buyer. If the GTC have in accordance with §§ 305 ff BGB been effectively included by us, as the user of these GTC, as part of the first-time conclusion of a contract, they shall also apply to any further contracts within the current business relationship.

Purchase contracts are all contracts that have as their object the sale of movable goods where the focus is on the transfer and procurement of ownership in accordance with §§ 433 paragraph 1, 929 BGB. This also includes deliveries, manufacture and planning by Seller if and to the extent that Buyer installs the goods or has them installed by third parties, even if initial operation is based on final settings and/or adjustment and final acceptance by Seller. Seller‘s recommendations communicated in this context are exclusively product-related and limited to product properties. Recommendations and statements by Seller that relate to specific construction projects and/or enquiries of Buyer and are to be regarded as a preliminary stage to the delivery of plant components or products to be manufactured as the focus of the contract shall not qualify the services as a contract for work and services. Rather the focus of the contract shall in such cases be on the delivery of movable goods and shall qualify the contract as a contract for work and materials. The fact that system parts or products are intended to be assembled into a system and then permanently installed on land or as an integral part of a building shall not prevent them from being classified as movable property within the meaning of § 650 BGB. The decisive factor is whether the goods are movable at the time of delivery.

All agreements made between Seller and Buyer in connection with the purchase contract shall be based on these GTC, Seller‘s written order confirmations and Seller‘s declaration of acceptance.

The version of the GTC valid at the time of conclusion of the contract shall apply.

Deviating, conflicting or supplementary terms and conditions of Buyer or other agreements between the parties shall not form part of the contract unless their validity has been expressly agreed in writing or confirmed in the order confirmation. Silence in respect of a contractual declaration by Buyer stating deviating terms and conditions and/or new conditions and regulations shall not constitute commercial or other confirmation.

Sales representatives, whether salaried or freelance, and service/application technicians of Seller are not authorised to agree to deviating terms and conditions within the meaning of § 1 paragraph 4 of these GTC or to issue or accept declarations of intent as part of legal transactions.

§ 2 Contract formation, acceptance

The presentation and advertising of articles from the programme, website, advertising, brochures and other printed products in digital and offline media of the Seller shall not constitute a binding offer to conclude a sales contract.

A contract is only concluded when Seller accepts an order enquiry by means of a declaration of acceptance or order confirmation or by delivering the ordered items. In the latter case, the order confirmation will be replaced by Seller‘s invoice.

The properties of samples, models and templates provided by Seller shall become part of the contract only where contractually agreed between Seller and Buyer (sample as subject of a product specification). In this case, if samples are expressly made the subject of a product specification, deviations from the sample due to production or manufacturing conditions or product development processes are expressly reserved.

In the case of call-off orders, Seller is entitled to procure the material or the goods for the entire order and to manufacture and/or purchase the entire order quantity immediately and Buyer shall accept the object of purchase at first offer. Any changes requested by Purchaser can therefore no longer be taken into account after conclusion of contract, unless expressly agreed otherwise between Purchaser and Seller in writing or such changes can be reasonably accommodated by Seller. Price and delivery date adjustments are in such cases expressly reserved.

The concluded contract is binding and cannot be changed unilaterally by Buyer.

Buyer shall accept the goods in accordance with § 433 paragraph 2 BGB within the framework of the agreement reached and, in accordance with § 280, 286 BGB, shall reimburse any loss caused by delay, in particular additional storage and delivery costs. In the absence of timely acceptance after the agreed delivery dates or delivery periods, Buyer shall owe a contractual penalty of 0.3 % of the net delivery Price per working day of delay, but not exceeding 5 % of the net delivery Price, unless Buyer is not responsible for the delay. Any other claims for damages shall be offset against this contractual penalty. This shall not affect any further reimbursable loss or expenses.

7. Delivery dates and delivery periods shall be binding only if agreed in writing or in text form. Delivery dates that are clearly marked as non-binding, in particular by information or additions from Seller such as „approx.“, etc., shall be non-binding. Delivery periods shall commence upon receipt by Buyer of confirmation of order. In the event of valid changes to order, the delivery period shall recommence upon receipt by Buyer of the amended order confirmation only if and to the extent that Seller expressly confirms the delivery periods in the amended order confirmation. In the event that Seller is culpably unable to comply with an expressly agreed contractual period or is in default for other reasons, Buyer shall grant a reasonable grace period, commencing on the date of receipt by Seller of written notice of default or, in the event that the period is specified by the calendar, on that date. After fruitless expiry of this period, Buyer shall be entitled to assert statutory claims. If delivery is delayed due to circumstances for which Seller is not responsible, e.g. strike (including at Seller‘s supplier) or force majeure, Buyer shall be informed immediately if possible and Seller shall not be obliged to pay damages or reimbursement of expenses at least in this case. Force majeure within the meaning of these contractual conditions shall also apply if circumstances have occurred at suppliers (and their suppliers) of Seller or at Seller itself that are not to be expected in the normal course of business. This includes, for example, the destruction and cessation of the means of production/manufacturing facilities due to e.g. fire, flood, extraordinary storm events (extraordinary in this context is if no comparable storm has occurred in the region concerned in the past five years) or a supply bottleneck for a necessary raw material due to a market-wide shortage of raw materials or if there are officially ordered plant shutdowns that are not attributable to culpable conduct on the part of Seller. If delays are considerable and if waiting is unreasonable for Buyer, Buyer is entitled to withdraw from the contract in writing after setting an ultimate written deadline, unless delivery is impossible or is a fixed transaction, i.e. Buyer‘s interest in the goods stands and falls with the delivery date. In the event that Seller obtains the goods from a third party or a manufacturer within the framework of a commercial transaction or a buyer who is an entrepreneur or a business person, the contract shall be subject to termination due to the lack of delivery by the contractual partner and Buyer shall not be entitled to compensation for damages or expenses. Should delivery be delayed for the aforementioned reasons – without performance being or becoming impossible – only to an extent reasonable for Buyer (generally 21 days beyond the agreed delivery date), Buyer shall not be entitled to the aforementioned rights, unless with respect to an absolute transaction for delivery by a fixed date. If the new delivery date or the delay is no longer reasonable for Buyer, Buyer may withdraw from the contract in writing after expiry of a reasonable grace period.

8. If the goods are dispatched by Seller via a logistics company commissioned by Seller, risk shall transfer to Buyer on transfer to a competent and hitherto reliable transport agent. In the event of damage to or destruction of goods after delivery to the carrier for reasons for which Seller is not responsible, Seller shall not be obliged to re-supply the goods and Buyer shall pay the purchase Price. In this respect, Seller shall assign to Buyer its claims for damages against the logistics company but shall not to assert any claim against the logistics company on behalf of Buyer subsequent to authorisation. During delay of Buyer in accepting goods, Seller shall be liable only for intent and gross negligence. If a product/item of a specific type is owed, risk shall pass to Buyer at the point at which Buyer is in default for non-acceptance of the product/item offered, § 300 BGB (German Civil Code).

9. The goods intended for installation must be installed by Buyer or by a specialist company commissioned by it (specialist engineer for sanitary equipment) independently of this contract. If Buyer is the final seller and its customer (end customer) is obliged to install the goods or products of Seller in fulfilment of a contract concluded with a third party, Buyer or the final seller shall impose on its customer (end customer) the provisions of section 9 of these GTC as below. If the goods are not installed professionally or in accordance with the installation conditions and installation descriptions, or if modifications are made to the goods supplied or to the installation materials by Buyer, a third party commissioned by Buyer or the end customer, warranty claims against Seller and claims under §§ 439 Para. 3, 445 a Para. 1 BGB shall be excluded, as in such cases the item is no longer the same as the purchased item. Buyers and end customers must inspect the goods or products immediately in accordance with § 377 HGB (see also below). Buyer understands this and shall inform its customers (end customers) that, in the course of the manufacturing process of Seller‘s high-quality products, it cannot be guaranteed that the areas behind the flanged edge (rear side of the surrounding vertical edge section of the bathtubs, shower trays, shower areas and washstands) that are not exposed to direct water contact during professional installation and assembly will have a complete glazing of the titanium steel. In order to ensure that no moisture/water can get behind the flanging edge, which due to manufacturing conditions does not have a complete glaze, it is the responsibility of Buyer or the end customer to fully comply with the installation instructions and product descriptions and to make no changes to the sealing interfaces. This is the only way to prevent any subsequent corrosion damage. In this respect, a production-related and unavoidable glaze of the titanium steel in the area behind the flanging edge that does not cover the entire surface or the entire circumference shall not be deemed a defect in the delivered goods/product

§ 3 Further terms of delivery and reservation of prepayment

1. The Seller shall be entitled to make partial deliveries, insofar as is reasonable for Buyer and nothing else has been confirmed in the order confirmation as agre.

2. In the case of orders from Buyers with their place of residence and business abroad or if there are well-founded indications of a possible risk of non-payment by Buyer, Seller expressly reserves the right to deliver only after receipt of the purchase Price plus shipping costs (prepayment reservation). If Seller exercises its right to prepayment, Buyer will be informed immediately. In this case, the delivery period shall commence only on payment of the purchase Price and shipping costs.

§ 4 Prices and despatch costs

1. The prices quoted by Seller are in euros ex works and do not include transport or packaging costs or VAT or, in the event of export deliveries, customs duties or fees or other public charges.

2. If under § 4 paragraph 1 of these GTC Seller fulfils orders of Buyer by means of partial deliveries, Buyer shall incur shipping costs only for the first partial delivery. If partial deliveries are made at Buyer‘s request, Seller shall charge the shipping costs for each partial delivery.

§ 5 Terms of payment, acknowledgement, set-off and right of retention

1. The purchase Price does not include statutory sales tax.

2. Invoices of Seller shall be payable in accordance with the terms and conditions agreed separately with Buyer or in the absence of such terms and conditions immediately. The date of payment shall be the date on which the money is received by Seller or credited to Seller‘s account. Buyer shall be in default of payment ten days after delivery even without a reminder from Seller. Seller is entitled to payment concurrently with delivery of goods. If a cash discount has been agreed it shall be based on the net amount and permissible only if all other obligations over 30 days old arising from Buyer‘s commercial relationship with Seller have been met in full.

3. Payments that are not sufficient to settle all liabilities arising from the continuing business relationship or in respect of an individual order shall initially be set off against the older liability. Seller shall inform Buyer of the set-off. If costs and interest have already been incurred, the payment shall first be set off against the costs, then against the interest and finally against the principal performance.

4. In the event of default by Buyer, Seller shall be entitled to retain deliveries or services under the ongoing business relationship with the Buyer until payment is made in full. Buyer may forestall this right of retention by providing a directly enforceable and unlimited guarantee from a German bank or cooperative bank or from a municipal credit institution (affiliated to a bonded security fund) covering all claims due to Buyer. If payments are deferred and made later than originally agreed, Buyer shall owe default interest for the deferment period in accordance with the provisions below.

5. The invoice sent to Buyer shall be deemed accepted if Buyer does not object to it within 30 calendar days of receipt of the invoice and if this legal consequence has been pointed out separately and prominently in the invoice.

6. Buyer shall for the period of the delay pay interest on the monetary debt at a rate of nine percentage points above the respective base interest rate plus a processing fee of €25.00, §§ 247, 288 BGB.

7. Buyer shall have the right of offset only where its counterclaims are legally established or are due and uncontested.

§ 6 Reservation of title

1. The delivered goods (reserved goods) shall remain the property of Seller until all claims to which Seller is entitled from Buyer, including future claims, have been met, including all balance claims from Buyer‘s account. Insofar as Buyer is in breach of contract – in particular insofar as Buyer is in default of remuneration – Seller shall be entitled to take back the reserved goods after setting a reasonable deadline for payment. Transport costs incurred for the return shall be borne by Buyer. Seller‘s revocation of reserved goods shall constitute withdrawal from contract. Withdrawal from contract shall likewise be constituted by Seller‘s seizure of reserved goods. Reserved goods taken back by Seller may be used again by Seller. The proceeds of the realisation shall be set off against payments owed by Buyer to Seller and after Seller has deducted an appropriate amount for administration costs.

2. Buyer shall treat reserved goods with care and store them in a suitable manner. Buyer shall at its own expense insure them against fire, water and theft at replacement value. If maintenance and inspection work becomes necessary, Buyer must carry this out in good time at its own expense.

   Buyer may use the reserved goods and resell them in the ordinary course

3. of business as long as Buyer is not in default of payment. Buyer shall not however pledge the reserved goods or assign them by way of security. Buyer‘s claims for payment against its customers from a resale of the reserved goods as well as Buyer‘s claims against its customers or third parties in respect of the reserved goods and arising from any other legal reason (in particular claims from tortious acts and claims to insurance benefits), including all balance claims from its current account, are hereby assigned by Buyer to Seller in full by way of security. Seller accepts this assignment. Buyer may on its own account and in its own name and on Seller‘s behalf collect these claims assigned to Seller as long Seller does not revoke this authorisation. Seller‘s right to collect these claims itself shall remain unaffected, although Seller shall not assert the claims itself, and shall not revoke authorisation to collect, as long as Buyer meets its payment obligations properly and completely.

   If however Buyer is in breach of contract – in particular if it is in default of payment –Seller may require Buyer to notify Seller of the assigned claims and the respective debtors, to notify the respective debtors of the assignment and to provide Seller with all documents and information required by Seller to assert the claim. In this respect, the parties agree that an independent right of Seller to information and inspection hereby arises.

4. Any processing or transformation of the reserved goods by Buyer shall be carried out on behalf of Seller. If the reserved goods are processed with other items not belonging to Seller, Seller shall acquire co-ownership of the new item in the same ratio as the ratio of the value of the reserved goods (final invoice amount including VAT) to the other processed items at the time of processing. In all other respects, the provisions applicable to the reserved goods shall likewise apply to the new object resulting from the processing. If the reserved goods are combined inseparably or mixed with other items not belonging to Seller, Seller shall acquire co-ownership of the new item in proportion to the value of the reserved goods (final invoice amount including VAT). If the reserved goods are combined or mixed in such a way that Buyer‘s item is to be regarded as the main item, Buyer and Seller shall agree that Buyer transfers co-ownership of the item to Seller on a pro rata basis. Seller accepts this transfer. Buyer shall properly keep and insure for Seller the sole ownership or co-ownership of any object thus created.

5. In the event of seizure of the reserved goods by third parties or other interventions by third parties, Buyer must refer to Seller‘s ownership and notify Seller immediately in writing so that Seller can assert its ownership rights. If the third party is unable to reimburse Seller for any court or out-of-court costs incurred in this connection, Buyer shall be liable for them.

6. At Buyer‘s request, Seller shall release the securities to it is entitled insofar as their realisable value exceeds the value of outstanding claims against Buyer by more than 10%. Seller may however select the securities to be released.

§ 7 Guarantee

1. a)
   Seller shall be liable for material defects and defects of title of delivered goods in accordance with statutory provisions, in particular §§ 434 ff, 280 ff BGB, although, or in the event of a commercial transaction, Buyer shall comply with § 377 HGB in accordance with the following provisions. The limitation period for statutory warranty claims is one year and begins with the delivery or handover of the goods to Buyer, unless Seller has fraudulently concealed a defect or assumed a guarantee for the quality of the goods or individual properties of the goods or the goods have within a year of delivery or transfer and in the sense intended by § 438 paragraph 1 No. 2 b) BGB been properly installed in accordance with Seller‘s specifications in an immovable structure firmly fixed to the ground, in which case the statutory limitation period applies.

   b)
   Recognisable defects, including to usable partial delivery, must be reported to Seller in writing by Buyer within six days of performance. Any complaint not made in due time or form excludes any claim of Buyer arising from breach of duty due to poor performance.

   c)
   Buyer must notify the transport company of any defects that are recognisable upon delivery and the transport company must arrange for the defects to be recorded. Complaints must contain a detailed Description of the defect to the best of Buyer‘s ability. A complaint not made in due time or form excludes any claim of Buyer arising from breach of duty due to poor performance. Insofar as defects in quantity, weight or volume are recognisable on delivery in accordance with the aforementioned inspection obligations, Buyer shall notify the carrier of these defects on receipt of the goods and have the complaint documented. Failure to give notice of defects in due time shall also exclude any claim by Buyer for breach of duty due to defective performance. Concealed defects must be communicated in writing immediately after they have become apparent and at the latest in accordance with the limitation period applicable in these GTC. Complaints must also contain a detailed Description of the defect. Any complaint not made in due time or form excludes any claim by Buyer for breach of duty due to defective performance.

d)
Upon commencement of processing, treatment, combination or mixing with other items or resale to end customers, the delivered goods shall be deemed to have been approved by Buyer in accordance with the contract.

e)
Other breaches of duty must prior to assertion of further rights by Buyer be reported by Buyer in writing and a reasonable period allowed for subsequent performance. Seller shall be granted three opportunities to remedy any defect. Seller assumes no liability for the usability of delivered goods or products within the overall system of Buyer or the end customer, unless such usability has been expressly assured in writing by Seller. Buyer must take this into account and as the final seller notify the end customer accordingly. In the course of work or construction owed by the final seller and/or end customer, the final seller and/or end customer must independently check with third parties whether the delivered goods and products that as far as necessary and legally prescribed have building authority approvals can achieve the results expected of them and whether national regulations (e.g. on construction, hygiene, sound, heat and environmental and current protection (e.g. equipotential bonding)) are complied with.

f)
If, in the course of rectification or any replacement delivery by Seller, it should transpire that it is not the performance of Seller or a product supplied by Seller that is responsible for the defect but rather another product or the equipment of the end customer or incorrect usage or handling or incorrect installation (e.g. by the end customer), Buyer shall on request reimburse the expenses provably incurred by Seller (e.g. travel expenses, customer service, hours, etc.). Liability for guarantee and damages is excluded if modifications have been made to Seller‘s goods either by Buyer or the end buyer or end customer or if the goods have been installed contrary to instructions. The same shall apply if material defects in the goods of Seller have arisen due to the fact that the delivered goods have been maintained or cleaned and used contrary to care instructions. The guarantee shall be void if Buyer or end buyer or end customer does not ensure through the professional installation and further use of the delivered goods that no moisture or water reaches incompletely glazed surfaces (flared edge) so that potential corrosion is avoided. Seller shall not be liable for dismantling or installation costs or for costs for interruption and re-commissioning of systems in which a product or product has been installed by Seller, unless Seller is responsible for the resulting defect, especially in the event of recall by the manufacturer or any other known defectiveness of the delivered goods.

g)
Should subsequent performance fail, whereby a subsequent improvement is to be regarded as failed only on the third unsuccessful attempt, or if Seller has rejected subsequent performance in writing expressly and finally, Buyer may assert its statutory claims. In the event of only a minor breach of contract, in particular only minor defects, Buyer shall not be entitled to withdraw from the contract. This is in particular the case if the functionality of the delivered goods is not significantly restricted and the assertion of the right to rescind the contract would therefore be disproportionate.

h)
Defects – with the exception of recourse against supplier as per §§ 445a, 475 BGB – shall be remedied free of charge by means of rectification or replacement delivery, the choice to be at Seller‘s discretion. Defects caused by Buyer or the end buyer or end customer and unjustified complaints shall be remedied on behalf of and at the expense of Buyer.

i)
Buyer shall provide all information necessary for the examination and handling of guarantee claims. Buyer shall provide Seller with the information required, including at least the Bette order confirmation number, article number and reason for complaint and where possible pictures of the damage. A form for complaints is available for download at www.bette.de
If installation has taken place at the end buyer or end customer, a copy of the installation protocols etc. must be made available.

j)
Claims by Buyer, the end buyer or end customer for expenses incurred for the purpose of subsequent performance, in particular transport and travel costs and labour and material costs, shall be excluded insofar as such expenses increase because the delivery item has subsequently been taken to a location other than the place of delivery or the branch office of Buyer. This shall not apply in cases of supplier recourse under §§ 445a, 475 BGB or in the case of claims due to breaches of duty resulting from malice or intent or in connection with death or injury.

Any claims for cancellation on the part of Buyer against Seller in the event of resale of goods shall be valid only insofar as Buyer has not reached an agreement with its buyer (end buyer) or end customer that goes beyond statutory warranty claims.

k)
Recognition of breaches of obligation must be made in writing to be valid.

Any guarantees given by Seller for certain goods shall apply in addition to claims for material defects or defects of title within the meaning of paragraph 1. Details of the scope of such guarantees shall be derived from guarantee conditions that accompany the article or the goods.

3. Information, advice, advertising. Information and advice regarding Seller‘s products/goods shall be provided exclusively on the basis of previous experience. As far as goods that require building supervisory approval are concerned, this approval is available. Only the product qualities specified by Seller (manufacturer) in relation to the respective product shall be decisive. Buyer or the end buyer and end customer must check at their own risk whether the goods can be installed and used as planned (see above). It is imperative that Buyer or end buyer and end customer carefully implement and observe product descriptions, assembly instructions and care instructions.

§ 8 Liability

1. Seller shall be liable for damages and reimbursement of expenses for defects already existing at the time of conclusion of contract only in the event of intent or gross negligence or if it fraudulently deceives Buyer.

2. If substantial defects occur that in accordance with the preceding provisions Buyer is not obliged to remedy or has not itself caused, Buyer shall initially only be entitled to remedy of defect by way of subsequent improvement within a reasonable period commencing on notification of defect. If remedy of defect is unsuccessful, unreasonable or impossible, Buyer shall have only statutory rights to reduction and withdrawal (see above).

3. In all other respects, liability of Seller, including for the conduct of its representatives and vicarious agents, for breach of other duties, tort and pursuant to §§ 280, 281 BGB shall be limited to gross negligence and intent. Seller shall therefore be liable only if it has caused the loss intentionally or through gross negligence. Seller is therefore not liable for loss or damage caused to Buyer‘s, end buyer‘s or end customer‘s goods, furnishings, data and the like, regardless of the type, origin, duration and extent of the damage or loss, unless Seller has caused the damage or loss intentionally or through gross negligence. This also applies to damage caused by the effects of moisture.

4. In the event of slight negligence, Seller shall be liable only if essential or typical contractual obligations (known as cardinal obligations) are breached. Cardinal obligations are those which enable contractual performance. Compensation for indirect loss such as loss of profit is excluded. With regard to electronic data and technical systems, it is recommended that Buyer, end purchaser and end customer take precautions against voltage drops and changes and take out appropriate electronic insurance (costs of data alteration, etc.).

5. The aforementioned exclusions and limitations of liability shall not apply in the event of death, injury or impairment of health, freedom or sexual self-determination resulting from a negligent breach of duty by Seller or a corresponding breach of duty by a legal representative or vicarious agent.

6. The aforementioned exclusions and limitations of liability shall not apply to damage or loss for the insurance of which Seller is responsible. In terms of amount, the Seller shall be liable, in particular in the event of recourse within the supply chain (§ 445 a BGB), up to the amount for which it is covered under its liability insurance. Buyer has the right at any time to ask Seller in writing about the amount of cover and the insurance conditions. Seller is obliged to inform Buyer, at least in text form, of the amount of cover and to make the insurance conditions available to Buyer upon request. Buyer is at liberty, in agreement with Seller and its insurer, to increase the sum insured on assumption of the policy costs involved.

7. If other factors have contributed to loss for which Seller is responsible, Seller shall be liable only to the extent of its fault in relation to the other causes.

§ 9 Copyright

Seller has copyright to all images, films and texts published or to be published by it. The images, films and texts may not be used without the express permission of Seller.

§ 10 Applicable law and jurisdiction

1. The law of Germany shall apply to the exclusion of UN sales law.

2. If Buyer is a merchant and has its head office in Germany at the time of the order, the exclusive place of jurisdiction shall be the head office of Seller, Bette GmbH & Co. KG, Heinrich-Bette-Strasse 1, 33129 Delbrück, Germany. Otherwise, for local and international jurisdiction, the applicable statutory provisions shall apply.

Publishing and legal information

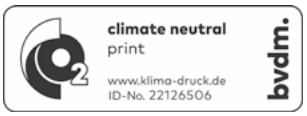

Copyright

All Image and trademark rights reserved. Program and technical changes and errors excepted. The colours of individual illustrations may vary, due to the printing process.

Subject to model changes, printing and other errors.

Next generation material:
Glazed Titanium-Steel
We believe in quality that lasts.

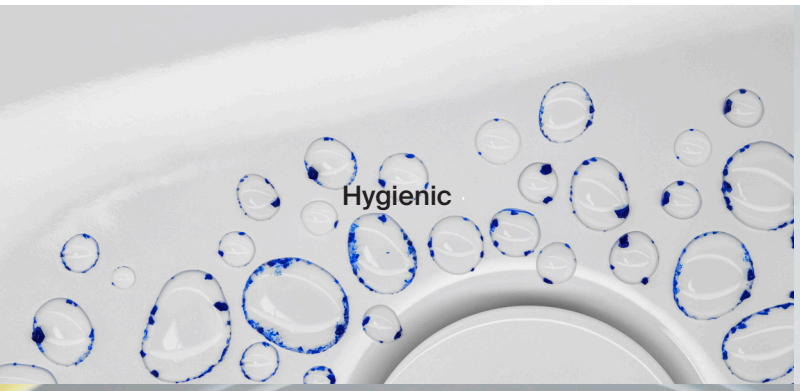

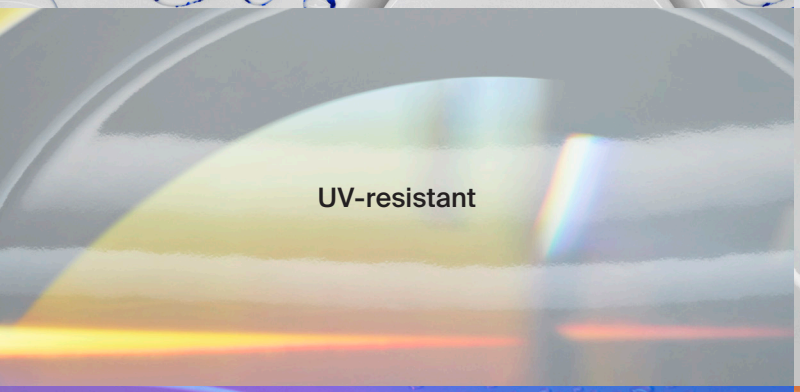

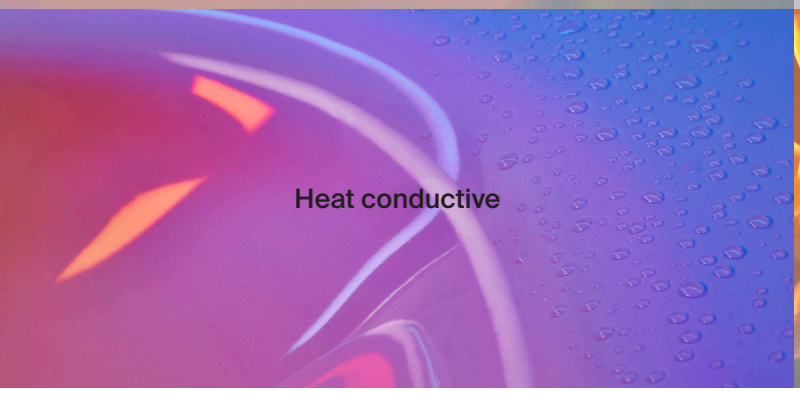

Glazed Titanium-Steel

Sustainable Quality

30 Years Warranty

Made in Germany

[1] Further information on our guarantee terms at www.my-bette.com

Z0016998 EN 03/2023 -Product changes, errors and omissions excepted.

Gross purchase price list
Price list excluding VAT.
Valid from 1. May 2023

Bette GmbH & Co. KG
Heinrich-Bette-Straße 1
33129 Delbrück
Germany
T +49 5250 511–0
F +49 5250 511–130
international@bette.de

www.my-bette.com